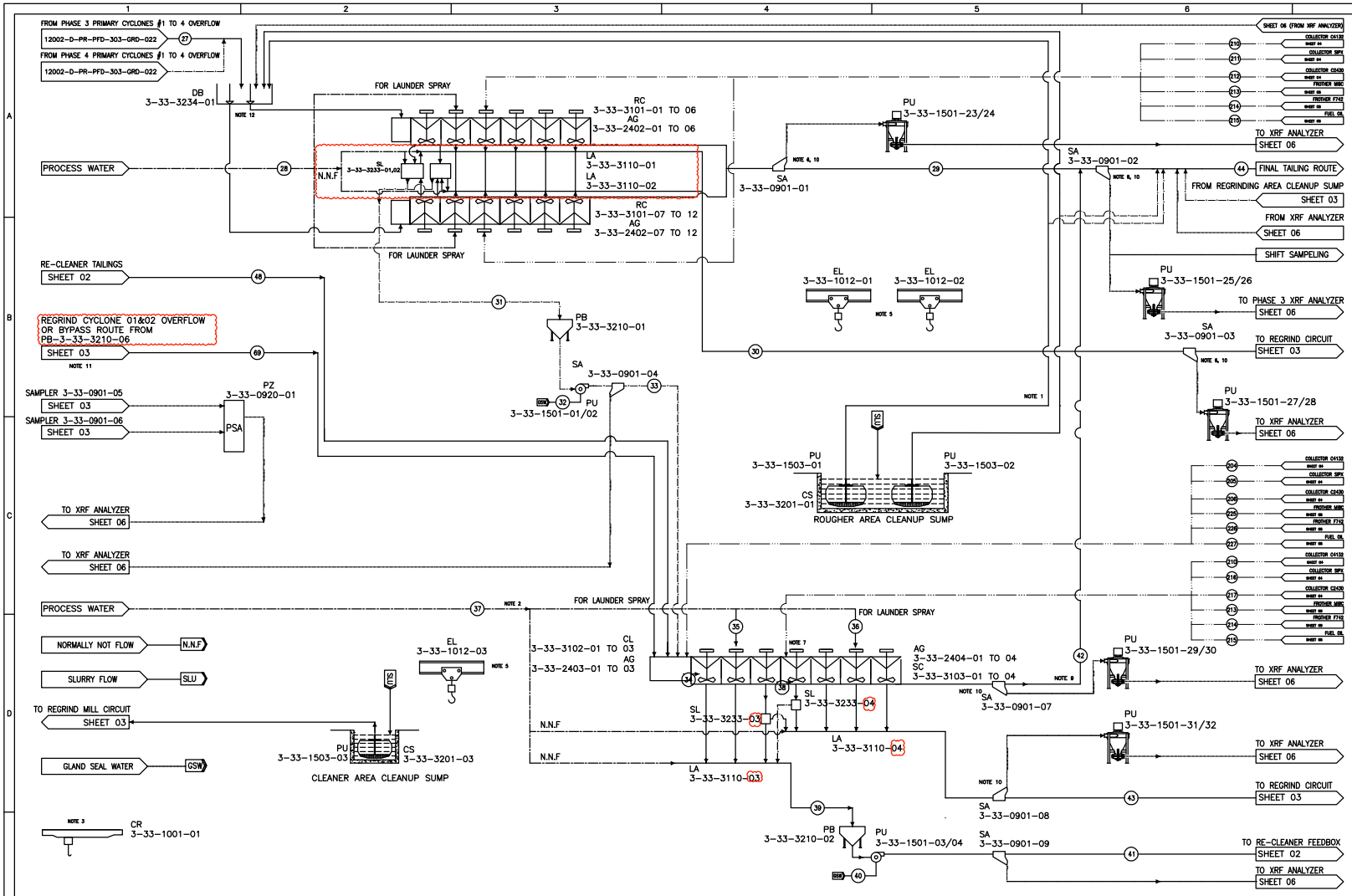

REFERENCE

REFERENCE. TITLE	REFERENCE. No.
PROCESS DESIGN CRITERIA	12002.D.PR.DCA.303.GNL.003
PFD Symbol and Legend	12002.D.PR.PFD.303.GNL.005

NOTES

1. IN EMERGENCY SHUT DOWN, THE SLURRY LINE SHOULD BE DIVERTED TO TAILINGS MAIN PIPE.
2. RAW WATER TO BE USED WHEN INSUFFICIENT CONCENTRATE THICKENER OVERFLOW FOR CLEANER LAUNDER SPRAY WATER.
3. 30 TON CRANE TO SERVICE FLOTATION AND REGRIND AREAS, CAPACITY WILL BE FINALIZED DURING DETAIL DESIGN.
4. GLAND SEAL WATER FLOW RATE WILL BE FINALIZED BY VENDOR DURING DETAIL DESIGN.
5. ELECTRICAL HOIST WILL BE USED FOR MAINTENANCE OF CLEAN UP SUMP PUMP. QUANTITY OF ELECTRICAL HOIST WILL BE FINALIZED AFTER COMPLETED G.A IN DETAIL DESIGN.
6. SAMPLING FOR METAL ACCOUNTING (METALLURGICAL SAMPLE) PURPOSES.
7 .ACCORDING TO Cu GRADE IN LAST CLEANER CELLS AND FIRST CLEANER-SCAVENGER CELLS, NUMBER OF CLEANER AND CLEANER SCAVENGER CELL COULD BE CHANGED TO 4-3 OR 3-4 CELLS.
8. TOTAL NOMINAL\DESIGN DOSAGE FLOW RATE FOR REAGENTS AS FOLLOWING TABLE AND WILL FINALIZED LATER.
9. THE POSSIBILITY OF SCAVENGER CELLS TAIL TRANSFERRING TO ROUGHER STAGE WILL BE EVALUATED AFTER FINALIZING RELATED G.A.
10. FOR SAMPLES THAT COULD NOT BE SENT TO XRF BY GRAVITY, VERTICAL PUMPS ADDED.
11. MILK OF LIME MASS IS NOT CONSIDERED IN HYDRO CYCLONES OVERFLOW.
12. STREAM 27 IS DIVIDED EQUALLY WITH SAME SPECIFICATION AND FEEDED INTO THE FEEDBOX OF THE TWO ROUGHER BANKS.

REAGENT DOSAGE

REAGENT	C4132	C2430	MIBC	F742	SIPX	FUEL OIL
NOMINAL DOSAGE (g/t)	25	20	20	20	20	40
DESIGN DOSAGE (g/t)	50	50	50	50	50	50

NOMINAL FLOW 2340 DTPH 0.44 Cu

Stream.no		27	28	29	30	31	32	33	34	35	36	37	38	39	40	41	42	43	44	48	69
Solids	dmt/h	2347.02	0.00	2018.44	328.58	234.70	0	234.70	377.28	0.00	0.00	0.00	311.83	65.45	0.00	65.45	287.83	24.00	2306.27	24.70	352.58
Solid	%	33.00	0.00	32.95	25.00	25.00	0.00	24.81	19.35	0.00	0.00	0.00	18.99	17.13	0.00	17.00	18.51	20.00	30.03	9.11	21.00
Water flowrate	m^3/h	4765.16	328.00	4107.42	985.74	704.31	7	711.11	1572.94	74.00	33.00	107.00	1380.57	316.57	3.00	329.57	1267.37	96.00	5374.79	246.57	1326.37
Slurry flowrate	m3/h	5603.38	328.00	4828.29	1103.09	787.93	7.00	794.93	1698.70	74.00	33.00	107.00	1438.44	334.26	3.00	337.26	1370.17	103.74	6198.46	254.54	1443.90
Slurry/bulk	t/h	7112.18	328.00	6125.86	1314.32	938.81	7.00	945.81	1950.22	74.00	33.00	107.00	1642.20	382.02	3.00	385.02	1555.20	120.00	7681.06	271.27	1678.95
Slurry Density	t/m^3	1.27	1.00	1.27	1.19	1.19	1.00	1.19	1.15	1.00	1.00	1.00	1.14	1.14	1.00	1.14	1.14	1.16	1.24	1.07	1.16
Solid Density	t/m^3	2.80	-	2.80	2.80	2.80	-	2.80	3.00	-	-	-	2.89	3.70	-	3.7	2.80	3.10	2.80	3.10	3.00
Cu Grade	%	0.44	-	0.04	2.90	7.00	-	7.00	3.18	-	-	-	0.39	16.5	-	16.50	0.13	3.50	0.05	6.60	2.94
Cu Mass	t/h	10.33	-	0.80	9.53	16.43	-	16.43	12.00	-	-	-	1.20	10.80	-	10.80	0.36	0.84	1.16	1.63	10.37
Cu Distribution	%	100.00	-	7.73	92.27	159.09	-	159.09	116.20	-	-	-	11.63	104.57	-	104.58	3.49	8.13	11.21	15.79	100.41

DESIGN FLOW 2700 DTPH 0.44 Cu

Stream.no		27	28	29	30	31	32	33	34	35	36	37	38	39	40	41	42	43	44	48	69
Solids	dmt/h	2708.10	0.00	2328.97	379.13	270.81	0	270.81	435.32	0.00	0.00	0.00	359.80	75.52	0.00	75.52	332.11	27.69	2661.08	28.50	406.82
Solid	%	33.00	0.00	33.19	25.00	25.00	0.00	24.84	19.47	0.00	0.00	0.00	19.25	17.11	0.00	17.00	18.83	20.00	30.30	9.53	21.00
Water flowrate	m^3/h	5498.26	328.00	4688.87	1137.39	812.43	7	819.43	1801.09	74.00	33.00	107.00	1509.35	365.74	3.00	368.74	1431.58	110.77	6120.45	270.66	1530.43
Slurry flowrate	m^3/h	6465.43	328.00	5520.64	1272.79	909.15	7	916.15	1946.19	74.00	33.00	107.00	1634.05	386.15	3.00	389.15	1550.19	119.70	7070.83	279.85	1666.03
Slurry/bulk	t/h	8206.35	328.00	7017.83	1516.52	1083.24	7.00	1090.24	2236.41	74.00	33.00	107.00	1869.15	441.26	3.00	444.26	1763.69	138.46	8781.52	299.16	1937.25
Slurry Density	t/m^3	1.27	1.00	1.27	1.19	1.19	1.00	1.19	1.15	1.00	1.00	1.00	1.14	1.14	1.00	1.14	1.14	1.16	1.24	1.07	1.16
Solid Density	t/m^3	2.80	-	2.80	2.80	2.80	-	2.80	3.00	-	-	-	2.89	3.70	-	3.70	2.80	3.10	2.80	3.10	3.00
Cu Grade	%	0.44	-	0.04	2.90	7.00	-	7.00	3.18	-	-	-	0.39	16.50	-	16.50	0.13	3.50	0.05	6.60	2.94
Cu Mass	t/h	11.92	-	0.92	10.99	18.96	-	18.96	13.85	-	-	-	1.39	12.46	-	12.46	0.42	0.97	1.34	1.88	11.96
Cu Distribution	%	100.00	-	7.73	92.27	159.09	-	159.09	116.20	-	-	-	11.63	104.58	-	104.58	3.49	8.13	11.21	15.79	100.41

NOMINAL CAPACITY (2340 DMTPY)

STREAM NO		204	205	206	210	211	212	213	214	215	216	217	225	226	227
REAGENT TYPE		C4132	SPIX	C2430	C4132	SPIX	C2430	MIBC	F742	FUEL OIL	SPIX	C2430	MIBC	F743	FUEL OIL
CONCENTRATION	w/w %	100	10	100	100.00	10.00	100.00	100.00	100.00	100.00	10.00	100.00	100	100	100
S.G		1	1	1	1.00	1.00	1.20	0.81	1.01	0.82	1.00	1.20	1	1	1
NOMINAL DOSAGE	g/t	N.N.F	N.N.F	N.N.F	4.17	2.76	2.76	2.22	2.22	5.71	4.14	4.14	N.N.F	N.N.F	N.N.F
DOSAGE FLOW RATE (MIN.)	ml/min	-	-	-	162.50	1075.86	89.66	107.39	85.89	271.78	1613.79	134.48	-	-	-
DESIGN DOSAGE	g/t	-	-	-	8.33	6.90	6.90	5.56	5.56	7.35	10.34	10.34	-	-	-
DOSAGE FLOW RATE (MAX.)	ml/min	-	-	-	325.00	2689.66	224.14	268.48	214.73	848.71	4034.48	336.21	-	-	-

DESIGN CAPACITY (2700 DMTPY)

STREAM NO		204	205	206	210	211	212	213	214	215	216	217	225	226	227
REAGENT TYPE		C4132	SPIX	C2430	C4132	SPIX	C2430	MIBC	F742	FUEL OIL	SPIX	C2430	MIBC	F743	FUEL OIL
CONCENTRATION	w/w %	100	10	100	100.00	10.00	100.00	100.00	100.00	100.00	10.00	100.00	100	100	100
S.G		1	1	1.2	1.00	1.00	1.20	0.81	1.01	0.82	1.00	1.20	0.807	1.009	0.82
NOMINAL DOSAGE	g/t	N.N.F	N.N.F	N.N.F	4.17	2.76	2.76	2.22	2.22	5.71	4.14	4.14	N.N.F	N.N.F	N.N.F
DOSAGE FLOW RATE (MIN.)	ml/min	-	-	-	187.50	1241.38	103.45	123.92	99.11	313.59	1862.07	155.17	-	-	-
DESIGN DOSAGE	g/t	-	-	-	8.33	6.90	6.90	5.56	5.56	7.35	10.34	10.34	-	-	-
DOSAGE FLOW RATE (MAX.)	ml/min	-	-	-	375.00	3103.45	258.62	309.79	247.77	403.52	4655.17	387.93	-	-	-

REV.	DATE	DESCRIPTION	PREPARED	CHECKED	APPROVED	AUTHORIZED
04	2025.03.04	ISSUED FOR APPROVAL				
03	2024.12.29	ISSUED FOR APPROVAL				
02	2024.03.04	ISSUED FOR APPROVAL				
01	2024.02.28	ISSUED FOR APPROVAL				
00	2023.11.28	ISSUED FOR REVIEW				

Title:

PFD For Cu Flotation Area-33

Document Number:	CLASS	SIZE	SCALE	SHEET NO.	REV. CLIENT	REV. VENDOR
12002-D-PR-PFD-303-FLO-024	FA	A3	N.T.S	1 OF 12	04	00
Library code: 303-E03-0000-00-PR-PFD-024-4						

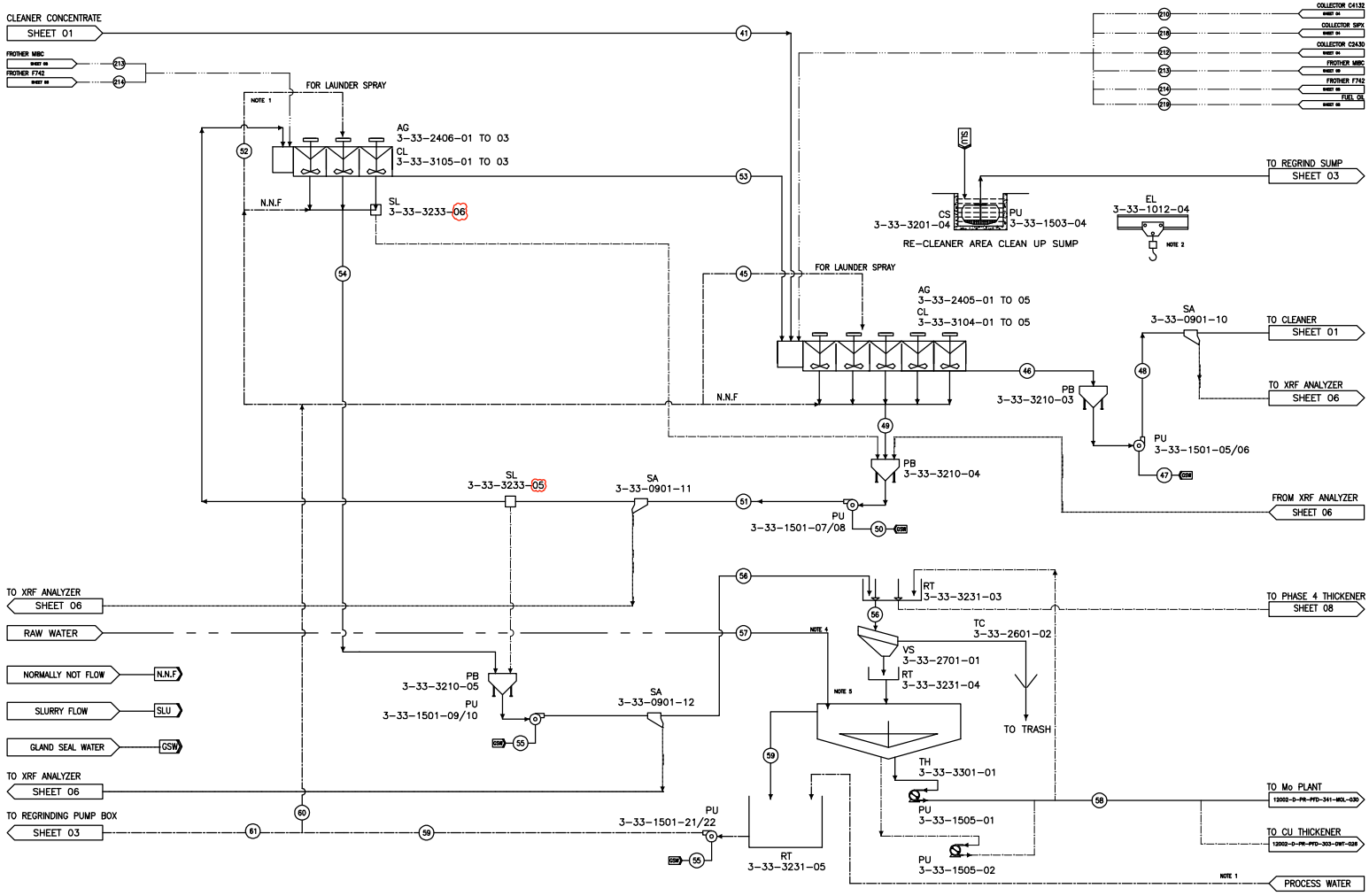

NOMINAL FLOW 2340 DTPH 0.44 Cu																			
Stream.no		41	45	46	47	48	49	50	51	52	53	54	55	56	57	58	59	60	61
Solids	dmt/h	65.45	0.00	24.70	0.00	24.70	54.58	0.00	54.58	0.00	13.83	40.75	0.00	40.75	0.00	40.75	0.00	0.00	0.00
Solid	%	17.00	0.00	9.17	0.00	9.11	18.12	0.00	18.00	0.00	9.78	20.20	0.00	20.00	0.00	50.00	0.00	0.00	0.00
Water flowrate	m^3/h	319.57	44.00	244.57	2.00	246.57	246.61	2.00	248.61	40.00	127.61	161.00	2.00	163.00	70.00	40.75	192.25	84.00	108.25
Slurry flowrate	m^3/h	337.26	44.00	252.54	2.00	254.54	260.78	2.00	262.78	40.00	131.67	171.19	2.00	173.19	70.00	50.94	192.25	84.00	108.25
Slurry/bulk	t/h	385.02	44.00	269.27	2.00	271.27	301.18	2.00	303.18	40.00	141.43	201.75	2.00	203.75	70.00	81.50	192.25	84.00	108.25
Slurry Density	t/m^3	1.14	1.00	1.07	1.00	1.07	1.15	1.00	1.15	1.00	1.07	1.18	1.00	1.18	1.00	1.60	1.00	1.00	1.00
Solid Density	t/m^3	3.70	-	3.10	-	3.10	3.85	-	3.85	-	3.40	4.00	-	4.00	-	4.00	-	-	-
Cu Grade	%	16.50	-	6.60	-	6.60	20.00	-	20.00	-	12.63	22.50	-	22.50	-	22.50	-	-	-
Cu Mass	t/h	10.80	-	1.63	-	1.63	10.92	-	10.92	-	1.75	9.17	-	9.17	-	9.17	-	-	-
Cu Distribution	%	104.58	-	15.79	-	15.79	105.70		105.70	-	16.91	88.79	-	88.79	-	88.79	-	-	-
DESIGN FLOW 2700 DTPH 0.44 Cu																			
Stream.no		41	45	46	47	48	49	50	51	52	53	54	55	56	57	58	59	60	61
Solids	dmt/h	75.52	0.00	28.50	0.00	28.50	62.97	0.00	62.97	0.00	15.95	47.02	0.00	47.02	0.00	47.02	0.00	0.00	0.00
Solid	%	17.00	0.00	9.59	0.00	9.53	18.10	0.00	18.00	0.00	10.18	20.17	0.00	20.00	0.00	50.00	0.00	0.00	0.00
Water flowrate	m^3/h	368.74	44.00	268.66	2.00	270.66	284.87	2.00	286.87	40.00	140.79	186.08	2.00	188.08	70.00	47.02	211.06	84.00	127.06
Slurry flowrate	m^3/h	389.15	44.00	277.85	2.00	279.85	301.23	2.00	303.23	40.00	145.49	197.83	2.00	199.83	70.00	58.77	211.06	84.00	127.06
Slurry/bulk	t/h	444.26	44.00	297.16	2.00	299.16	347.84	2.00	349.84	40.00	156.75	233.10	2.00	235.10	70.00	94.04	211.06	84.00	127.06
Slurry Density	t/m^3	1.14	1.00	1.07	1.00	1.07	1.15	1.00	1.15	1.00	1.08	1.18	1.00	1.18	1.00	1.60	1.00	1.00	1.00
Solid Density	t/m^3	3.70	-	3.10	-	3.10	3.85	-	3.85		3.40	4.00	-	4.00	-	4.00	-	-	
Cu Grade	%	16.50	-	6.60	-	6.60	20.00	-	20.00		12.63	22.50	-	22.50	-	22.50	-	-	
Cu Mass	t/h	12.46	-	1.88	-	1.88	12.59	-	12.59		2.01	10.58	-	10.58	-	10.58	-	-	
Cu Distribution	%	104.58	-	15.79	-	15.79	105.70	-	105.70		16.91	88.79	-	88.79	-	88.79	-	-	

NOMINAL CAPACITY (2340 DMTPY)							
STREAM NO		210	212	213	214	218	219
REAGENT TYPE		C4132	C2430	MIBC	F742	SPIX	FUEL OIL
CONCENTRATION	w/w %	100.00	100.00	100.00	100.00	10.00	100.00
S.G		1.00	1.20	0.81	1.01	1.00	0.82
NOMINAL DOSAGE	g/t	4.17	2.76	2.22	2.22	5.52	4.57
DOSAGE FLOW RATE (MIN.)	ml/min	162.50	89.66	107.39	85.89	2151.72	217.42
DESIGN DOSAGE	g/t	8.33	6.90	5.56	5.56	13.79	5.88
DOSAGE FLOW RATE (MAX.)	ml/min	325.00	224.14	268.48	214.73	5379.31	279.77
DESIGN CAPACITY (2700 DMTPY)							
STREAM NO		210	212	213	214	218	219
REAGENT TYPE		C4132	C2430	MIBC	F742	SPIX	FUEL OIL
CONCENTRATION	w/w %	100.00	100.00	100.00	100.00	10.00	100.00
S.G		1.00	1.20	0.81	1.01	1.00	0.82
NOMINAL DOSAGE	g/t	4.17	2.76	2.22	2.22	5.52	4.57
DOSAGE FLOW RATE (MIN.)	ml/min	187.50	103.45	123.92	99.11	2482.76	250.87
DESIGN DOSAGE	g/t	8.33	6.90	5.56	5.56	13.79	5.88
DOSAGE FLOW RATE (MAX.)	ml/min	375.00	258.62	309.79	247.77	6206.90	322.81

REFERENCE

REFERENCE. TITLE	REFERENCE. No.
PROCESS DESIGN CRITERIA	12002.D.PR.DCA.303.GNL.003
PFD Symbol and Legend	12002.D.PR.PFD.303.GNL.005

NOTES

1. PROCESS FLOW USED WHEN THICKENER OVERFLOW DECREASE.
2. QUANTITY OF ELECTRICAL HOIST IN FLOTATION AREA WILL BE FINALIZED DURING DETAIL DESIGN.
3. GLAND SEAL WATER FLOW RATE WILL BE FINALIZED BY VENDOR.
4. RAW WATER TO BE USED FOR FROTH SUPPRESSION ON Mo-Cu CONCENTRATE THICKENER. FLOW RATE WILL BE FINALIZED BY VENDOR DURING DETAIL DESIGN.
5. FROTH COLLECTING OR FROTH SUPPRESSION EQUIPMENT WILL BE CONSIDERED.

REV.	DATE	DESCRIPTION	PREPARED	CHECKED	APPROVED	AUTHORIZED
04	2025.03.04	ISSUED FOR APPROVAL				
03	2024.12.29	ISSUED FOR APPROVAL				
02	2024.03.04	ISSUED FOR APPROVAL				
01	2024.02.26	ISSUED FOR APPROVAL				
00	2023.11.28	ISSUED FOR REVIEW				

Title:

PFD For Cu Flotation Area-33

Document Number:	CLASS	SIZE	SCALE	SHEET NO.	REV. CLIENT	REV. VENDOR
12002-D-PR-PFD-303-FLO-024	FA	A3	N.T.S	2 OF 12	04	00
Library code: 303-E03-0000-00-PR-PFD-024-4						

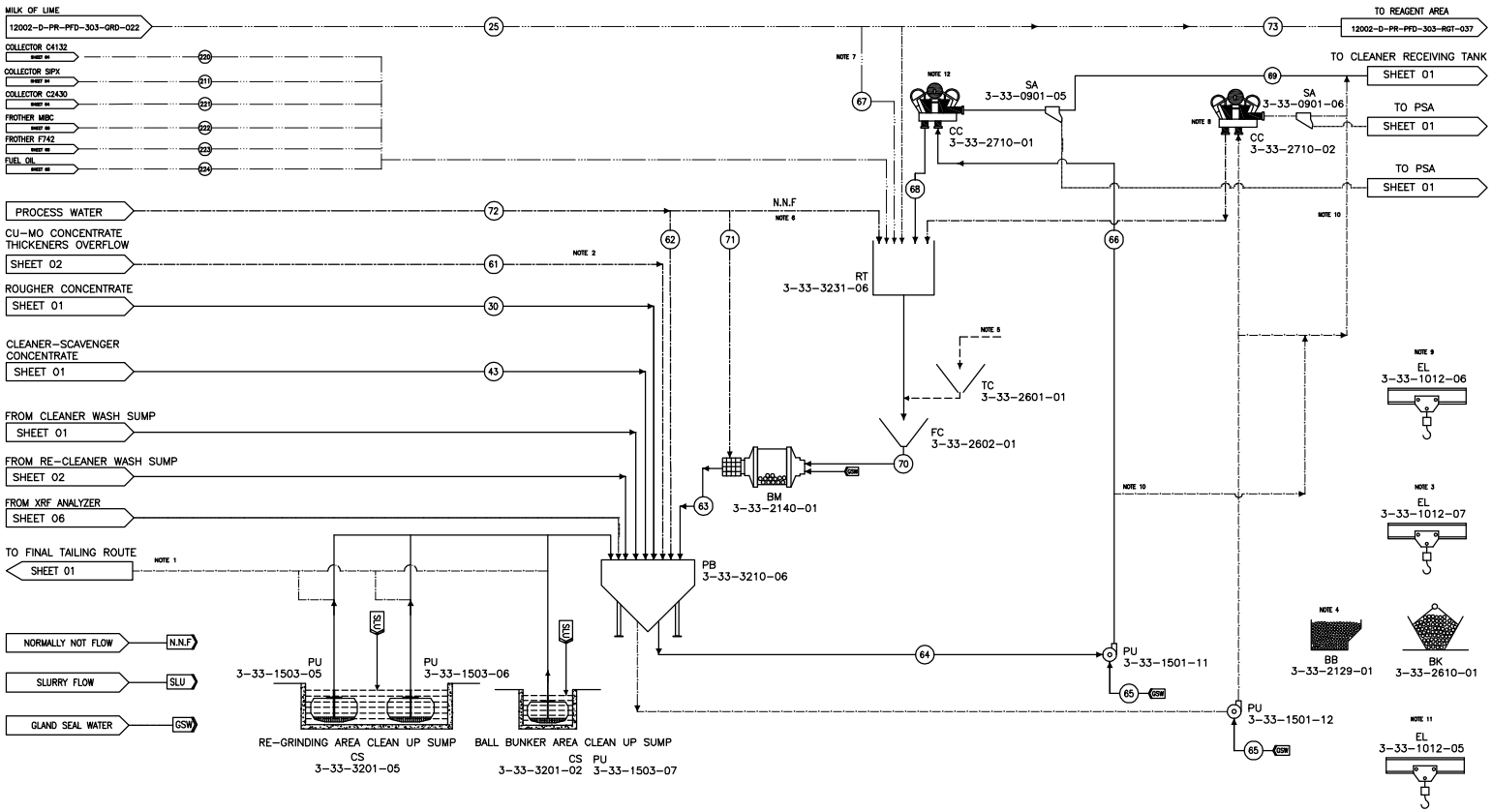

REFERENCE

REFERENCE. TITLE	REFERENCE. No.
PROCESS DESIGN CRITERIA	12002.D.PR.DCA.303.GNL.003
PFD Symbol and Legend	12002.D.PR.PFD.303.GNL.005

NOTES

1. IN EMERGENCY, THE SLURRY LINE WILL BE DIVERTED TO TAILINGS ROUTE.
2. CU-MO CONCENTRATE THICKENER OVERFLOW TO BE USED TO SUPPLEMENT PROCESS WATER TO PUMP BOX, WHEN SUFFICIENT VOLUME IS AVAILABLE.
3. ELECTRIC HOIST TO HAVE MOVABLE BUGGY TO TRANSPORT BALL LOADING SPUTNICK TO REGRIND MILL.
4. BALL BUNKERS TO HAVE 30 DAY CHARGE CAPACITY.
5. BALL IS DIRECTLY FED VIA A DEDICATED NOZZLE.
6. BALL MILL FEED SOLID PERCENT WILL BE FINALIZED BY VENDOR.
7. MILK OF LIME COULD BE ADDED TO UNDERFLOW OF REGRIND CYCLONE FOR pH ADJUSTMENT IN CLEANER STAGES.
8. CYCLONE CLUSTERS WORK AS DUTY AND STAND BY. EACH CLUSTER ARE CONNECTED TO A PUMP.
9. ELECTRIC HOIST TO BE USED TO ACCESS CYCLONE FEED PUMPS FOR MAINTENANCE PURPOSES.
10. IN AN EMERGENCY SITUATION IT WILL BE POSSIBLE TO DIVERT THE SLURRY FROM REGRIND PUMP BOX TO CLEANER STAGE.
11. ELECTRICAL HOIST WILL BE USED FOR MAINTENANCE OF CLEAN UP SUMP PUMP.
12. MILK OF LIME MASS IS NOT CONSIDERED IN HYDRO CYCLONES OVERFLOW.

REV.	DATE	DESCRIPTION	PREPARED	CHECKED	APPROVED	AUTHORIZED
04	2025.03.04	ISSUED FOR APPROVAL				
03	2024.12.29	ISSUED FOR APPROVAL				
02	2024.03.04	ISSUED FOR APPROVAL				
01	2024.02.28	ISSUED FOR APPROVAL				
00	2023.11.28	ISSUED FOR REVIEW				

Title:

PFD For Cu Flotation Area-33

Document Number:	CLASS	SIZE	SCALE	SHEET NO.	REV.	
12002-D-PR-PFD-303-FLO-024					CLIENT	VENDOR
Library code: 303-E03-0000-00-PR-PFD-024-4	FA	A3	N.T.S	3 OF 12	04	00

NOMINAL FLOW 2340 DTPH 0.44 Cu

Stream.no		25	30	43	61	62	63	64	65	66	67	68	69	70	71	72	73
Solids	dmt/h	5.62	328.58	24.00	0.00	0.00	1058.44	1411.02	0.00	1411.02	0.70	1057.74	352.58	1058.44	0.00	0.00	4.91
Solid	%	15.00	25.00	20.00	0.00	0.00	65.08	43.09	0.00	43.00	15.00	66.03	21.00	65.89	0.00	0.00	15.00
Water flowrate	m^3/h	31.82	985.74	96.00	108.25	105.40	568.03	1863.42	7.00	1870.42	3.98	544.05	1326.37	548.03	20.00	125.40	27.85
Slurry flowrate	m^3/h	34.16	1103.09	103.74	108.25	105.40	933.01	2349.98	7.00	2356.98	4.27	908.79	1443.90	913.01	20.00	125.40	29.89
Slurry/bulk	t/h	37.44	1314.32	120.00	108.25	105.40	1626.47	3274.45	7.00	3281.45	4.68	1601.79	1678.95	1606.47	20.00	125.40	32.76
Slurry Density	t/m^3	1.10	1.19	1.16	1.00	1.00	1.74	1.39	1.00	1.39	1.10	1.76	1.16	1.76	1.00	1.00	1.10
Solid Density	t/m^3	2.40	2.80	3.10	-	-	2.90	2.90	-	2.90	2.40	2.90	3.00	2.90	-	-	2.40
Cu Grade	%	-	2.90	3.50	-	-	2.94	2.94	-	2.94	-	2.94	2.94	2.94	-	-	-
Cu Mass	t/h	-	10.53	0.84	-	-	31.11	41.48	-	41.48	-	31.11	10.37	31.11	-	-	-
Cu Distribution	%	-	92.27	8.13	-	-	301.22	401.62		401.62	-	301.22	100.41	301.22	-	-	-

DESIGN FLOW 2700 DTPH 0.44 Cu

Stream.no		25	30	43	61	62	63	64	65	66	67	68	69	70	71	72	73
Solids	dmt/h	6.48	378.13	27.69	0.00	0.00	1221.28	1628.10	0.00	1628.10	0.81	1220.47	406.82	1221.28	0.00	0.00	5.67
Solid	%	15.00	25.00	20.00	0.00	0.00	65.18	43.08	0.00	43.00	15.00	66.03	21.00	65.89	0.00	0.00	15.00
Water flowrate	m^3/h	36.72	1137.39	110.77	127.06	123.62	652.34	2151.18	7.00	2158.18	4.59	627.75	1530.43	632.34	20.00	143.62	32.13
Slurry flowrate	m^3/h	39.42	1272.79	119.70	127.06	123.62	1073.47	2712.58	7.00	2719.58	4.93	1048.60	1666.03	1053.47	20.00	143.62	34.49
Slurry/bulk	t/h	43.20	1516.52	138.46	127.06	123.62	1873.62	3779.28	7.00	3786.28	5.40	1848.22	1937.25	1853.62	20.00	143.62	37.80
Slurry Density	t/m^3	1.10	1.19	1.16	1.00	1.00	1.75	1.39	1.00	1.39	1.10	1.76	1.16	1.76	1.00	1.00	1.10
Solid Density	t/m^3	2.40	2.80	3.10	-	-	2.90	2.90	-	2.90	2.40	2.90	3.00	2.90	-	-	2.40
Cu Grade	%	-	2.90	3.50	-	-	2.94	2.94	-	2.94	-	2.94	2.94	2.94	-	-	-
Cu Mass	t/h	-	10.99	0.97	-	-	35.89	47.85	-	47.85	-	35.89	11.96	35.89	-	-	-
Cu Distribution	%	-	92.27	8.13	-	-	301.22	401.62	-	401.62	-	301.22	100.41	301.22	-	-	-

NOMINAL CAPACITY (2340 DMTPY)

STREAM NO		211	220	221	222	223	224
REAGENT TYPE		SPIX	C4132	C2430	MIBC	F742	FUEL OIL
CONCENTRATION	w/w %	10.00	100.00	100.00	100.00	100.00	100.00
S.G		1.00	1.00	1.20	0.81	1.01	0.82
NOMINAL DOSAGE	g/t	2.76	6.94	5.52	3.33	3.33	6.86
DOSAGE FLOW RATE (MIN.)	ml/min	1075.86	270.83	179.31	161.09	128.84	326.13
DESIGN DOSAGE	g/t	6.90	13.89	13.79	8.33	8.33	8.82
DOSAGE FLOW RATE (MAX.)	ml/min	2689.66	541.67	448.28	402.73	322.10	419.66

DESIGN CAPACITY (2700 DMTPY)

STREAM NO		211	220	221	222	223	224
REAGENT TYPE		SPIX	C4132	C2430	MIBC	F742	FUEL OIL
CONCENTRATION	w/w %	10.00	100.00	100.00	100.00	100.00	100.00
S.G		1.00	1.00	1.20	0.81	1.01	0.82
NOMINAL DOSAGE	g/t	2.76	6.94	5.52	3.33	3.33	6.86
DOSAGE FLOW RATE (MIN.)	ml/min	1241.38	312.50	206.90	185.87	148.66	376.31
DESIGN DOSAGE	g/t	6.90	13.89	13.79	8.33	8.33	8.82
DOSAGE FLOW RATE (MAX.)	ml/min	3105.45	625.00	517.24	464.68	371.66	484.22

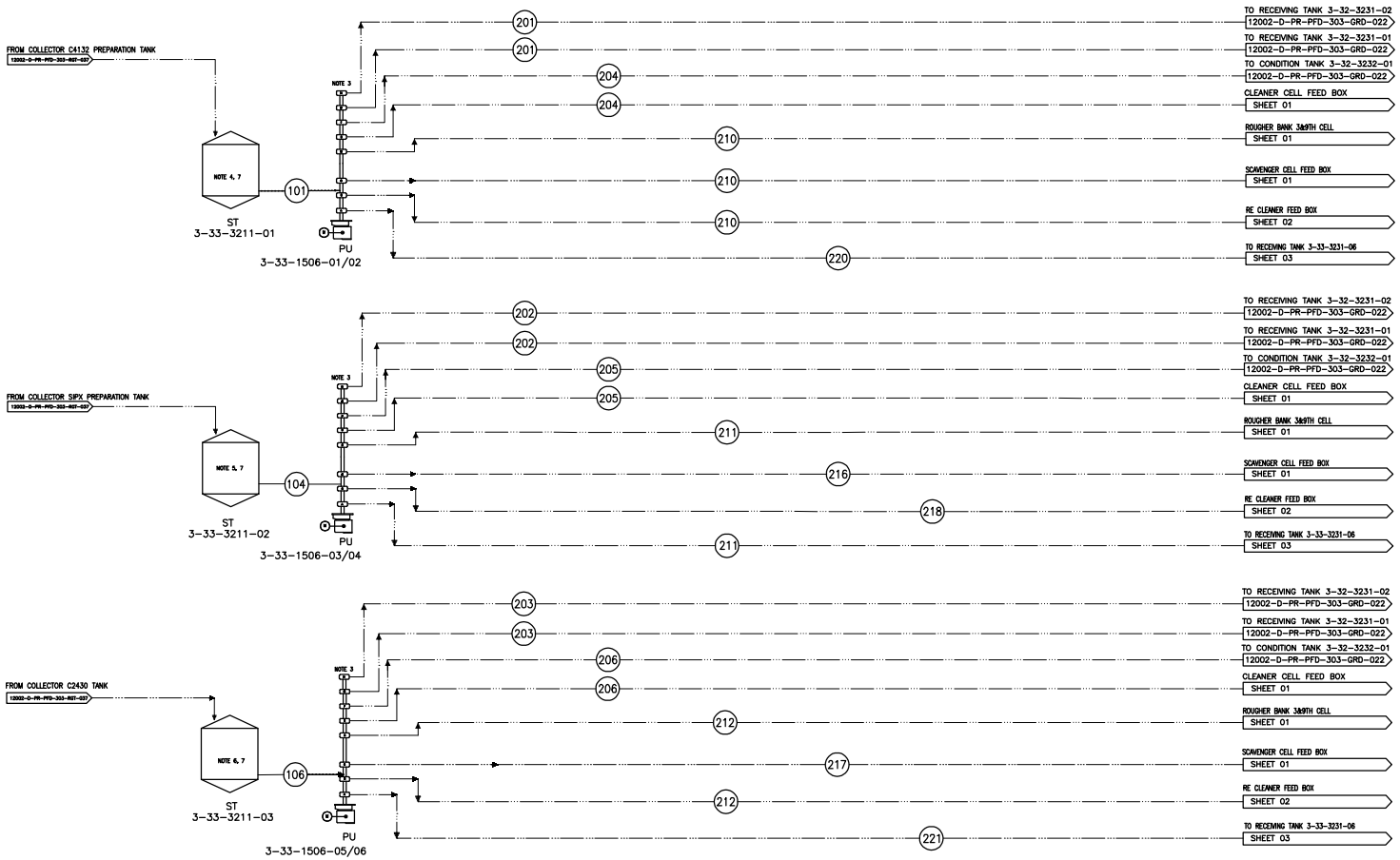

NOMINAL CAPACITY (2340 DMTPY)																			
STREAM NO		101	104	106	201	202	203	204	205	206	210	211	212	216	217	218	220	221
REAGENT TYPE		C4132	SPIX	C2430	C4132	SPIX	C2430	C4132	SPIX	C2430	C4132	SPIX	C2430	SPIX	C2430	SPIX	C4132	C2430
CONCENTRATION	w/w %	100.00	10.00	100.00	100.00	10.00	100.00	100.00	10.00	100.00	100.00	10.00	100.00	10.00	100.00	10.00	100.00	100.00
S.G		1.00	1.00	1.20	1.00	1.00	1.20	1.00	1.00	1.20	1.00	1.00	1.20	1.00	1.20	1.00	1.00	1.20
NOMINAL DOSAGE	g/t	25.00	20.00	20.00	2.78	2.41	2.41	N.N.F	N.N.F	N.N.F	4.17	2.76	2.76	4.14	4.14	5.52	6.94	5.52
DOSAGE FLOW RATE (MIN.)	ml/min	975.00	7800.00	650.00	108.33	941.38	78.45	-	-	-	162.50	1075.86	89.66	1613.79	134.48	2151.72	270.83	179.31
DESIGN DOSAGE	g/t	50.00	50.00	50.00	5.56	6.03	6.03	-	-	-	8.33	6.90	6.90	10.34	10.34	13.79	13.89	13.79
DOSAGE FLOW RATE (MAX.)	ml/min	1950.00	19500.00	1625.00	216.67	2353.45	196.12	-	-	-	325.00	2689.66	224.14	4034.48	336.21	5379.31	541.67	448.28

DESIGN CAPACITY (2700 DMTPY)																			
STREAM NO		101	104	106	201	202	203	204	205	206	210	211	212	216	217	218	220	221
REAGENT TYPE		C4132	SPIX	C2430	C4132	SPIX	C2430	C4132	SPIX	C2430	C4132	SPIX	C2430	SPIX	C2430	SPIX	C4132	C2430
CONCENTRATION	w/w %	100.00	10.00	100.00	100.00	10.00	100.00	100.00	10.00	100.00	100.00	10.00	100.00	10.00	100.00	10.00	100.00	100.00
S.G		1.00	1.00	1.20	1.00	1.00	1.20	1.00	1.00	1.20	1.00	1.00	1.20	1.00	1.20	1.00	1.00	1.20
NOMINAL DOSAGE	g/t	25.00	20.00	20.00	2.78	2.41	2.41	N.N.F	N.N.F	N.N.F	4.17	2.76	2.76	4.14	4.14	5.52	6.94	5.52
DOSAGE FLOW RATE (MIN.)	ml/min	1125.00	9000.00	750.00	125.00	1086.21	90.52	-	-	-	187.50	1241.38	103.45	1862.07	155.17	2482.76	312.50	206.90
DESIGN DOSAGE	g/t	50.00	50.00	50.00	5.56	6.03	6.03	-	-	-	8.33	6.90	6.90	10.34	10.34	13.79	13.89	13.79
DOSAGE FLOW RATE (MAX.)	ml/min	2250.00	22500.00	1875.00	250.00	2715.52	226.29	-	-	-	375.00	3103.45	258.62	4655.17	387.93	6206.90	625.00	517.24

REFERENCE

REFERENCE. TITLE	REFERENCE. No.
PROCESS DESIGN CRITERIA	12002.D.PR.DCA.303.GNL.003
PFD Symbol and Legend	12002.D.PR.PFD.303.GNL.005

NOTES

1. REQUIRED DOSAGES OF COLLECTORS CONSIDERED BASED ON FRESH SOLID FEED TO THE SAG MILL.
2. THE TYPE AND DOSAGE OF REAGENTS WILL BE FINALIZED DURING DETAIL ENGINEERING.
3. MULTI HEAD DOSING PUMPS WORK AS 1 DUTY AND 1 STAND BY.
4. LIVE CAPACITY OF C4132 DAILY TANK IS 3.24 m3.
5. LIVE CAPACITY OF SIPX DAILY TANK IS 32.4 m3.
6. LIVE CAPACITY OF C2430 DAILY TANK IS 2.7 m3.
7. LIVE CAPACITY OF DAILY STORAGE TANKS WILL BE FINALIZED ACCORDING TO G.A DOCUMENTS.

REV.	DATE	DESCRIPTION	PREPARED	CHECKED	APPROVED	AUTHORIZED
04	2025.03.04	ISSUED FOR APPROVAL				
03	2024.12.29	ISSUED FOR APPROVAL				
02	2024.03.04	ISSUED FOR APPROVAL				
01	2024.02.28	ISSUED FOR APPROVAL				
00	2023.11.28	ISSUED FOR REVIEW				

Title:

PFD For Cu Flotation Area-33

Document Number:	CLASS	SIZE	SCALE	SHEET NO.	REV.	
12002-D-PR-PFD-303-FLO-024					CLIENT	VENDOR
Library code: 303-E03-0000-00-PR-PFD-024-4	FA	A3	N.T.S	4 OF 12	04	00

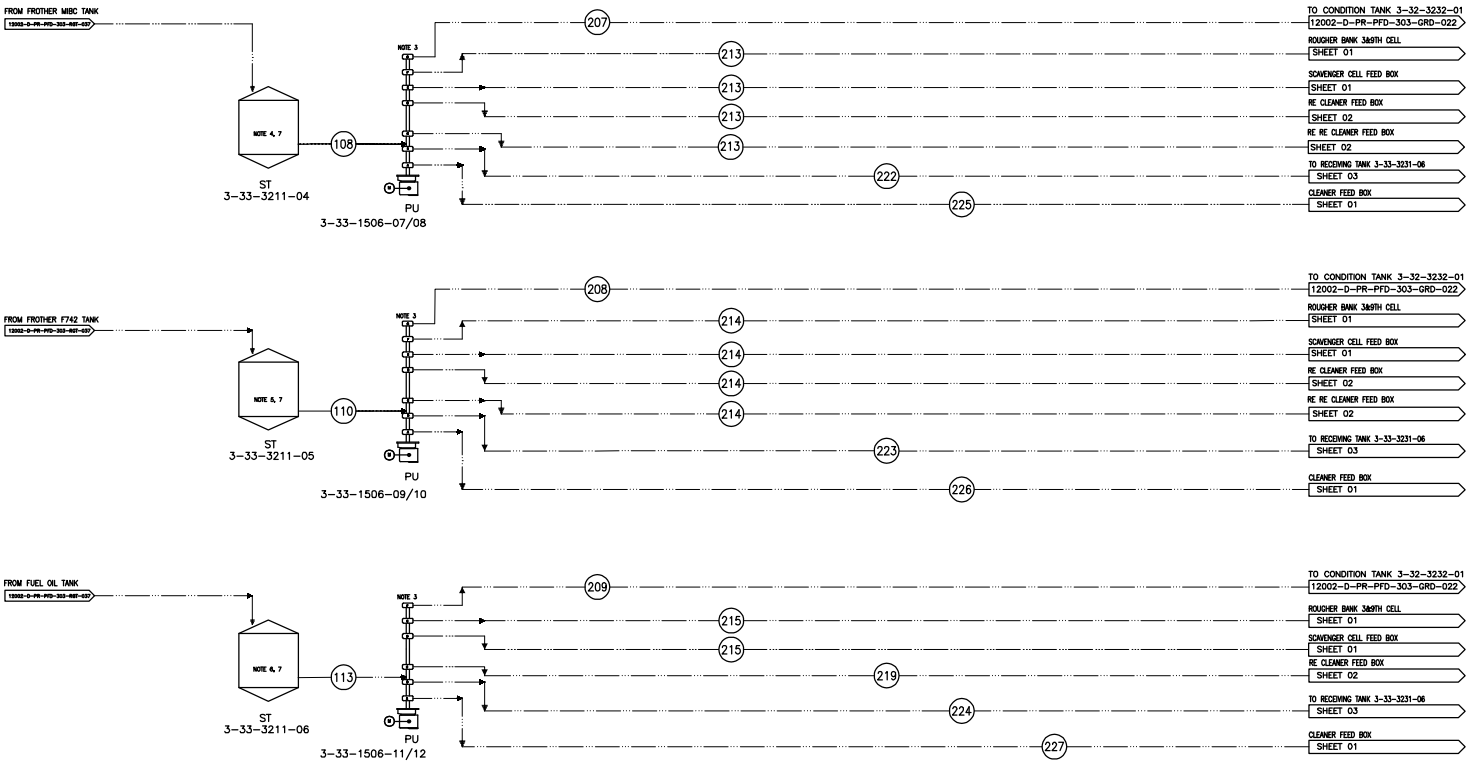

REFERENCE

REFERENCE. TITLE	REFERENCE. No.
PROCESS DESIGN CRITERIA	12002.D.PR.DCA.303.GNL.003
PFD Symbol and Legend	12002.D.PR.PFD.303.GNL.005

NOTES

1. REQUIRED DOSAGES OF REAGENTS CONSIDERED BASED ON FRESH SOLID FEED TO THE SAG MILL.
2. THE TYPE AND DOSAGE OF REAGENTS WILL BE FINALIZED DURING DETAIL ENGINEERING.
3. MULTI HEAD DOSING PUMPS WORK AS 1 DUTY AND 1 STAND BY.
4. LIVE CAPACITY OF MIBC DAILY TANK IS 4 m3.
5. LIVE CAPACITY OF F742 DAILY TANK IS 3.2 m3.
6. LIVE CAPACITY OF FUEL OIL DAILY TANK IS 4 m3.
7. LIVE CAPACITY OF DAILY STORAGE TANKS WILL BE FINALIZED ACCORDING TO C.A DOCUMENTS.

REV.	DATE	DESCRIPTION	PREPARED	CHECKED	APPROVED	AUTHORIZED
04	2025.03.04	ISSUED FOR APPROVAL				
03	2024.12.29	ISSUED FOR APPROVAL				
02	2024.03.04	ISSUED FOR APPROVAL				
01	2024.02.28	ISSUED FOR APPROVAL				
00	2023.11.28	ISSUED FOR REVIEW				

NOMINAL CAPACITY (2340DMTPY)																		
STREAM NO		108	110	113	207	208	209	213	214	215	219	222	223	224	225	226	227
REAGENT TYPE		MIBC	F742	FUEL OIL	MIBC	F742	FUEL OIL	MIBC	F742	FUEL OIL	FUEL OIL	MIBC	F742	FUEL OIL	MIBC	F743	FUEL OIL
CONCENTRATION	w/w %	100.00	100.00	100.00	100.00	100.00	100.00	100.00	100.00	100.00	100.00	100.00	100.00	100.00	100	100	100
S.G		0.81	1.01	0.82	0.81	1.01	0.82	0.81	1.01	0.82	0.82	0.81	1.01	0.82	0.807	1.009	0.82
NOMINAL DOSAGE	g/t	20.00	20.00	40.00	7.78	7.78	17.14	2.22	2.22	5.71	4.57	3.33	3.33	6.86	N.N.F	N.N.F	N.N.F
DOSAGE FLOW RATE (MIN.)	ml/min	966.54	773.04	1902.44	375.88	300.63	815.33	107.39	85.89	271.78	217.42	161.09	128.84	326.13	-	-	-
DESIGN DOSAGE	g/t	50.00	50.00	50.00	19.44	19.44	20.59	5.56	5.56	7.35	5.88	8.33	8.33	8.82	-	-	-
DOSAGE FLOW RATE (MAX.)	ml/min	2416.36	1932.61	2378.05	939.69	751.57	979.20	268.48	214.73	349.71	279.77	402.73	322.10	419.66	-	-	-

DESIGN CAPACITY (2700 DMTPY)																	
STREAM NO		108	110	113	207	208	209	213	214	215	219	222	223	224	225	226	227
REAGENT TYPE		MIBC	F742	FUEL OIL	MIBC	F742	FUEL OIL	MIBC	F742	FUEL OIL	FUEL OIL	MIBC	F742	FUEL OIL	MIBC	F743	FUEL OIL
CONCENTRATION	w/w %	100.00	100.00	100.00	100.00	100.00	100.00	100.00	100.00	100.00	100.00	100.00	100.00	100.00	100	100	100
S.G		0.81	1.01	0.82	0.81	1.01	0.82	0.81	1.01	0.82	0.82	0.81	1.01	0.82	0.807	1.009	0.82
NOMINAL DOSAGE	g/t	20.00	20.00	40.00	7.78	7.78	17.14	2.22	2.22	5.71	4.57	3.33	3.33	6.86	N.N.F	N.N.F	N.N.F
DOSAGE FLOW RATE (MIN.)	ml/min	1115.24	891.97	2195.12	433.71	346.88	940.77	123.92	99.11	313.59	250.87	185.87	148.66	376.31	-	-	-
DESIGN DOSAGE	g/t	50.00	50.00	50.00	19.44	19.44	20.59	5.56	5.56	7.35	5.88	8.33	8.33	8.82	-	-	-
DOSAGE FLOW RATE (MAX.)	ml/min	2788.10	2229.93	2743.90	1084.26	867.20	1129.84	309.79	247.77	408.52	322.81	464.68	371.46	484.22	-	-	-

Title:

PFD For Cu Flotation Area-33

Document Number:	CLASS	SIZE	SCALE	SHEET NO.	REV.	
12002-D-PR-PFD-303-FLO-024					CLIENT	VENDOR
Library code: 303-E03-0000-00-PR-PFD-024-4	FA	A3	N.T.S	5 OF 12	04	00

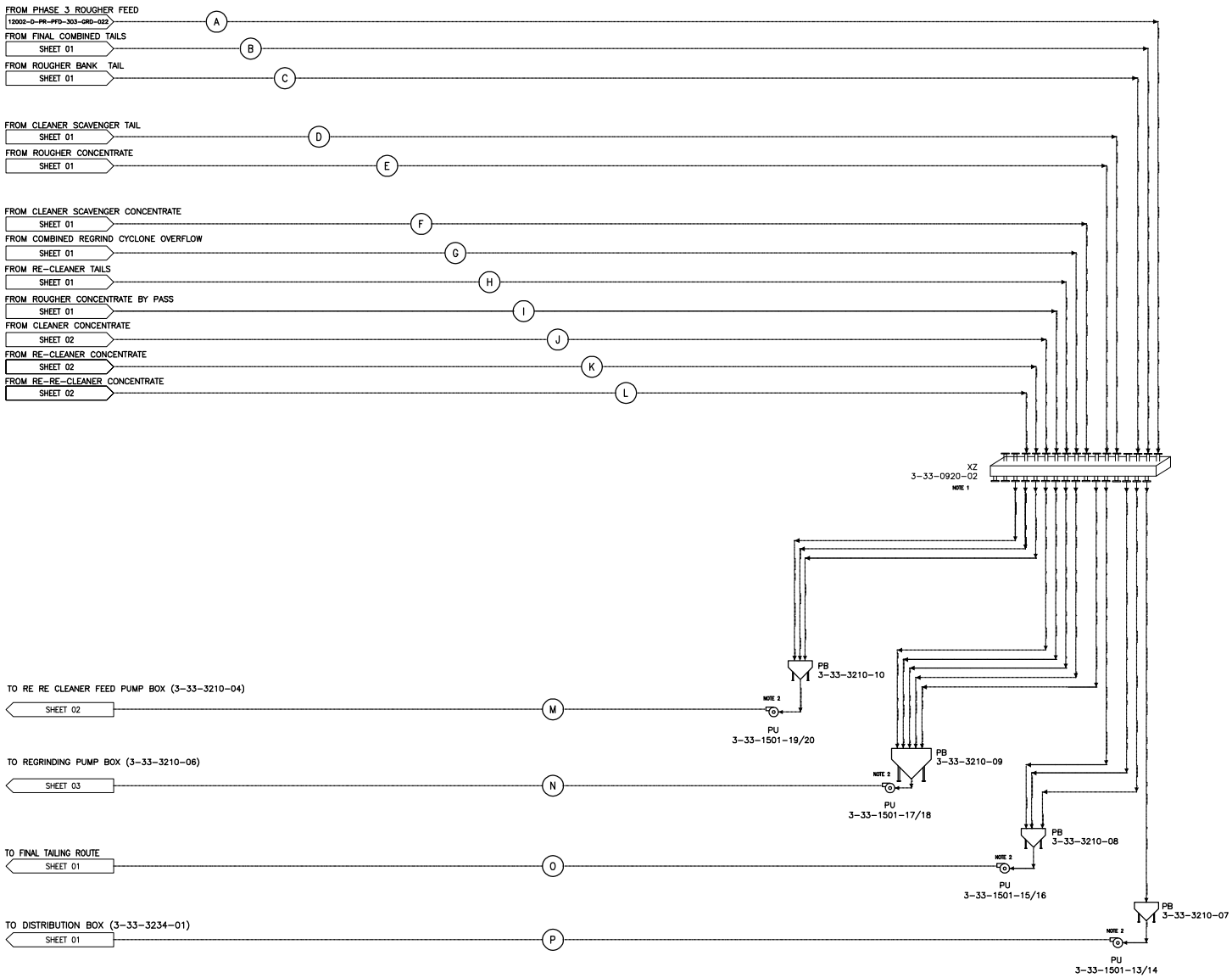

SAMPLES FLOW

Stream.no		A	B	C	D	E	F	G	H	I	J	K	L	M	N	O	P
Solids	dmt/h	5.03	4.47	5.02	1.26	1.79	0.70	1.47	0.29	1.77	0.59	0.62	0.70	1.91	6.01	10.74	5.03
Solid	%	33.00	30.03	32.95	18.51	25.00	20.00	21.00	9.11	24.81	17.13	18.00	20.00	18.39	21.52	29.11	33.00
Water flowrate	m^3/h	10.20	10.41	10.21	5.55	5.36	2.78	5.51	2.90	5.37	2.84	2.83	2.82	8.50	21.93	26.16	10.20
Slurry flowrate	m^3/h	12.00	12.00	12.00	6.00	6.00	3.00	6.00	3.00	6.00	3.00	3.00	3.00	8.99	24.00	29.99	12.00
Slurry/bulk	t/h	15.23	14.87	15.22	6.81	7.15	3.48	6.98	3.19	7.14	3.43	3.46	3.52	10.41	27.94	36.90	15.23
Slurry Density	t/m^3	1.27	1.24	1.27	1.14	1.19	1.16	1.16	1.07	1.19	1.14	1.15	1.18	1.16	1.16	1.23	1.27
Solid Density	t/m^3	2.80	2.80	2.80	2.80	2.80	3.10	3.00	3.10	2.80	3.70	3.85	4.00	3.86	2.90	2.80	2.80
Cu Grade	%	0.44	0.05	0.04	0.13	2.90	3.50	2.94	6.60	7.00	16.50	20.00	22.50	19.85	4.37	0.05	0.44
Cu Mass	t/h	-	-	-	-	-	-	-	-	-	-	-	-	-	-	-	-
Cu Distribution	%	-	-	-	-	-	-	-	-	-	-	-	-	-	-	-	-

REFERENCE

REFERENCE. TITLE	REFERENCE. No.
PROCESS DESIGN CRITERIA	12002.D.PR.DCA.303.GNL.003
PFD Symbol and Legend	12002.D.PR.PFD.303.GNL.005

NOTES

1. POSITION AND METHOD OF SLURRY RETURN WILL BE FINALIZED.
2. NECESSITY AND THE TYPE (HORIZONTAL OR VERTICAL) OF TRANSFERRING PUMP WILL BE FINALIZED DURING DETAIL DESIGN ACCORDING TO G.A.

REV.	DATE	DESCRIPTION	PREPARED	CHECKED	APPROVED	AUTHORIZED
04	2025.03.04	ISSUED FOR APPROVAL				
03	2024.12.29	ISSUED FOR APPROVAL				
02	2024.03.04	ISSUED FOR APPROVAL				
01	2024.02.28	ISSUED FOR APPROVAL				
00	2023.11.28	ISSUED FOR REVIEW				

Title:

PFD For Cu Flotation Area-33

Document Number:	CLASS	SIZE	SCALE	SHEET NO.	REV. CLIENT	REV. VENDOR
12002-D-PR-PFD-303-FLO-024						
Library code: 303-E03-0000-00-PR-PFD-024-4	FA	A3	N.T.S	6 OF 12	04	00

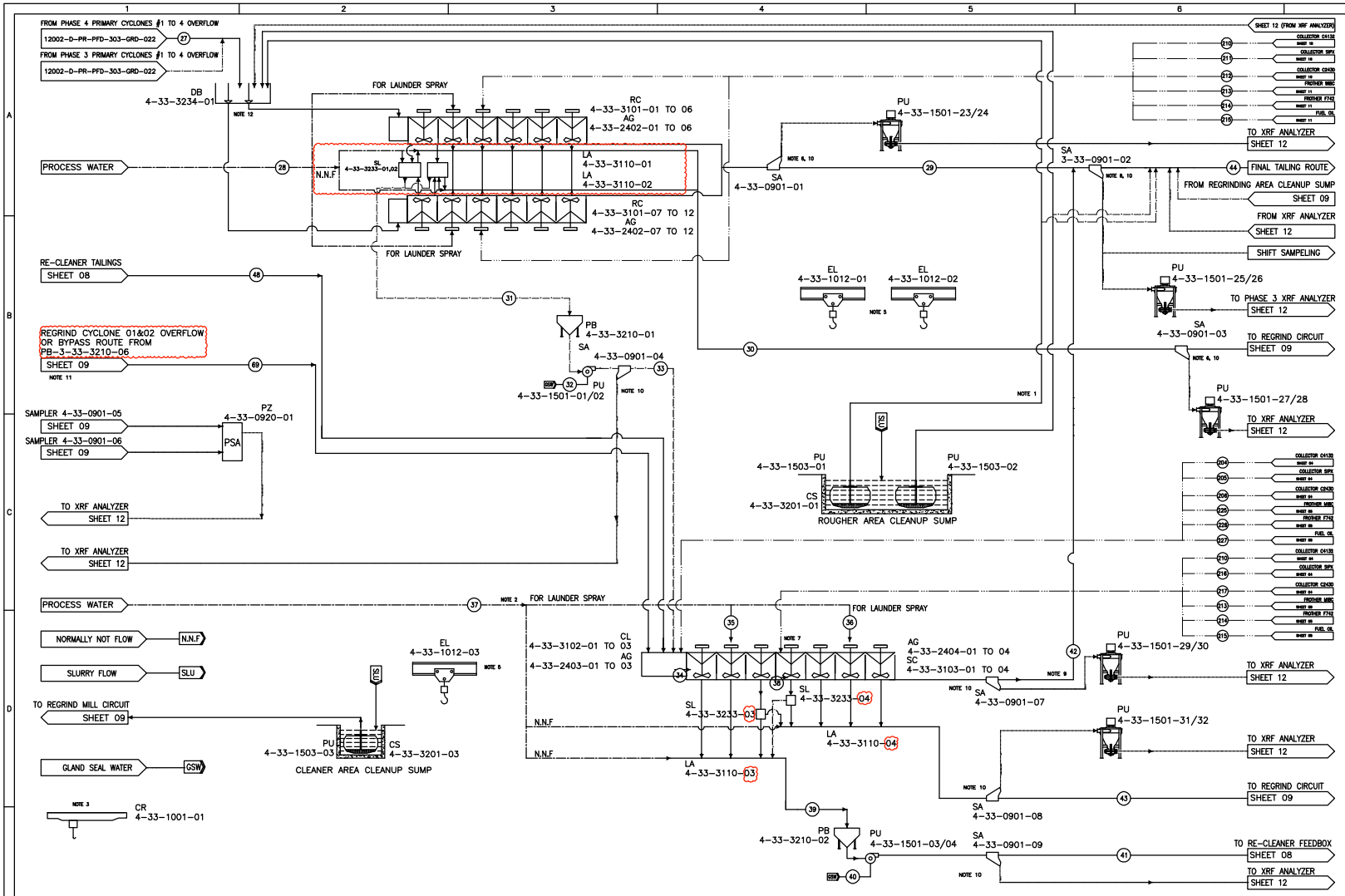

REFERENCE

REFERENCE. TITLE	REFERENCE. No.
PROCESS DESIGN CRITERIA	12002.D.PR.DCA.303.GNL.003
PFD Symbol and Legend	12002.D.PR.PFD.303.GNL.005

NOTES

1. IN EMERGENCY SHUT DOWN, THE SLURRY LINE SHOULD BE DIVERTED TO TAILINGS MAIN PIPE.
2. RAW WATER TO BE USED WHEN INSUFFICIENT CONCENTRATE THICKENER OVERFLOW FOR CLEANER LAUNDER SPRAY WATER.
3. 30 TON CRANE TO SERVICE FLOTATION AND REGRIND AREAS, CAPACITY WILL BE FINALIZED DURING DETAIL DESIGN.
4. GLAND SEAL WATER FLOW RATE WILL BE FINALIZED BY VENDOR DURING DETAIL DESIGN.
5. ELECTRICAL HOIST WILL BE USED FOR MAINTENANCE OF CLEAN UP SUMP PUMP. QUANTITY OF ELECTRICAL HOIST WILL BE FINALIZED AFTER COMPLETED G.A IN DETAIL DESIGN.
6. SAMPLING FOR METAL ACCOUNTING (METALLURGICAL SAMPLE) PURPOSES.
7 .ACCORDING TO Cu GRADE IN LAST CLEANER CELLS AND FIRST CLEANER-SCAVENGER CELLS, NUMBER OF CLEANER AND CLEANER SCAVENGER CELL COULD BE CHANGED TO 4-3 OR 3-4 CELLS.
8. TOTAL NOMINAL\DESIGN DOSAGE FLOW RATE FOR REAGENTS AS FOLLOWING TABLE AND WILL FINALIZED LATER.
9. THE POSSIBILITY OF SCAVENGER CELLS TAIL TRANSFERRING TO ROUGHER STAGE WILL BE EVALUATED AFTER FINALIZING RELATED G.A.
10. FOR SAMPLES THAT COULD NOT BE SENT TO XRF BY GRAVITY, VERTICAL PUMPS ADDED.
11. MILK OF LIME MASS IS NOT CONSIDERED IN HYDRO CYCLONES OVERFLOW.
12. STREAM 27 IS DIVIDED EQUALLY WITH SAME SPECIFICATION AND FEEDED INTO THE FEEDBOX OF THE TWO ROUGHER BANKS.

REAGENT DOSAGE

REAGENT	C4132	C2430	MIBC	F742	SIPX	FUEL OIL
NOMINAL DOSAGE (g/t)	25	20	20	20	20	40
DESIGN DOSAGE (g/t)	50	50	50	50	50	50

NOMINAL FLOW 2340 DTPH 0.44 Cu

Stream.no		27	28	29	30	31	32	33	34	35	36	37	38	39	40	41	42	43	44	48	69
Solids	dmt/h	2347.02	0.00	2018.44	328.58	234.70	0	234.70	377.28	0.00	0.00	0.00	311.83	65.45	0.00	65.45	287.83	24.00	2306.27	24.70	352.58
Solid	%	33.00	0.00	32.95	25.00	25.00	0.00	24.81	19.35	0.00	0.00	0.00	18.99	17.13	0.00	17.00	18.51	20.00	30.03	9.11	21.00
Water flowrate	m^3/h	4765.16	328.00	4107.42	985.74	704.31	7	711.11	1572.94	74.00	33.00	107.00	1380.57	320.57	3.00	329.57	1267.37	96.00	5574.79	246.57	1326.37
Slurry flowrate	m3/h	5603.38	328.00	4828.29	1103.09	787.93	7.00	794.93	1698.70	74.00	33.00	107.00	1438.44	334.26	3.00	337.26	1370.17	103.74	6198.46	254.54	1443.90
Slurry/bulk	t/h	7112.18	328.00	6125.86	1314.32	938.81	7.00	945.81	1950.22	74.00	33.00	107.00	1642.20	382.02	3.00	385.02	1555.20	120.00	7681.06	271.27	1678.95
Slurry Density	t/m^3	1.27	1.00	1.27	1.19	1.19	1.00	1.19	1.15	1.00	1.00	1.00	1.14	1.14	1.00	1.14	1.14	1.16	1.24	1.07	1.16
Solid Density	t/m^3	2.80	-	2.80	2.80	2.80	-	2.80	3.00	-	-	-	2.89	3.70	-	3.7	2.80	3.10	2.80	3.10	3.00
Cu Grade	%	0.44	-	0.04	2.90	7.00	-	7.00	3.18	-	-	-	0.39	16.5	-	16.50	0.13	3.50	0.05	6.60	2.94
Cu Mass	t/h	10.33	-	0.80	9.53	16.43	-	16.43	12.00	-	-	-	1.20	10.80	-	10.80	0.36	0.84	1.16	1.63	10.37
Cu Distribution	%	100.00	-	7.73	92.27	159.09	-	159.09	116.20	-	-	-	11.63	104.57	-	104.58	3.49	8.13	11.21	15.79	100.41

DESIGN FLOW 2700 DTPH 0.44 Cu

Stream.no		27	28	29	30	31	32	33	34	35	36	37	38	39	40	41	42	43	44	48	69
Solids	dmt/h	2708.10	0.00	2328.97	379.13	270.81	0	270.81	435.32	0.00	0.00	0.00	359.80	75.52	0.00	75.52	332.11	27.69	2661.08	28.50	406.82
Solid	%	33.00	0.00	33.19	25.00	25.00	0.00	24.84	19.47	0.00	0.00	0.00	19.25	17.11	0.00	17.00	18.83	20.00	30.30	9.53	21.00
Water flowrate	m^3/h	5498.26	328.00	4688.87	1137.39	812.43	7	819.43	1801.09	74.00	33.00	107.00	1509.35	365.74	3.00	368.74	1431.58	110.77	6120.45	270.66	1530.43
Slurry flowrate	m^3/h	6465.43	328.00	5520.64	1272.79	909.15	7	916.15	1946.19	74.00	33.00	107.00	1634.05	386.15	3.00	389.15	1550.19	119.70	7070.83	279.85	1666.03
Slurry/bulk	t/h	8206.35	328.00	7017.83	1516.52	1083.24	7.00	1090.24	2236.41	74.00	33.00	107.00	1869.15	441.26	3.00	444.26	1763.69	138.46	8781.52	299.16	1937.25
Slurry Density	t/m^3	1.27	1.00	1.27	1.19	1.19	1.00	1.19	1.15	1.00	1.00	1.00	1.14	1.14	1.00	1.14	1.14	1.16	1.24	1.07	1.16
Solid Density	t/m^3	2.80	-	2.80	2.80	2.80	-	2.80	3.00	-	-	-	2.89	3.70	-	3.70	2.80	3.10	2.80	3.10	3.00
Cu Grade	%	0.44	-	0.04	2.90	7.00	-	7.00	3.18	-	-	-	0.39	16.50	-	16.50	0.13	3.50	0.05	6.60	2.94
Cu Mass	t/h	11.92	-	0.92	10.99	18.96	-	18.96	13.85	-	-	-	1.39	12.46	-	12.46	0.42	0.97	1.34	1.88	11.96
Cu Distribution	%	100.00	-	7.73	92.27	159.09	-	159.09	116.20	-	-	-	11.63	104.58	-	104.58	3.49	8.13	11.21	15.79	100.41

NOMINAL CAPACITY (2340 DMTPY)

STREAM NO		204	205	206	210	211	212	213	214	215	216	217	225	226	227
REAGENT TYPE		C4132	SPIX	C2430	C4132	SPIX	C2430	MIBC	F742	FUEL OIL	SPIX	C2430	MIBC	F743	FUEL OIL
CONCENTRATION	w/w %	100	10	100	100.00	10.00	100.00	100.00	100.00	100.00	10.00	100.00	100	100	100
S.G		1	1	1	1.00	1.00	1.20	0.81	1.01	0.82	1.00	1.20	1	1	1
NOMINAL DOSAGE	g/t	N.N.F	N.N.F	N.N.F	4.17	2.76	2.76	2.22	2.22	5.71	4.14	4.14	N.N.F	N.N.F	N.N.F
DOSAGE FLOW RATE (MIN.)	ml/min	-	-	-	162.50	1075.86	89.66	107.39	85.89	271.78	1613.79	134.48	-	-	-
DESIGN DOSAGE	g/t	-	-	-	8.33	6.90	6.90	5.56	5.56	7.35	10.34	10.34	-	-	-
DOSAGE FLOW RATE (MAX.)	ml/min	-	-	-	325.00	2689.66	224.14	268.48	214.73	349.71	4034.48	336.21	-	-	-

DESIGN CAPACITY (2700 DMTPY)

STREAM NO		204	205	206	210	211	212	213	214	215	216	217	225	226	227
REAGENT TYPE		C4132	SPIX	C2430	C4132	SPIX	C2430	MIBC	F742	FUEL OIL	SPIX	C2430	MIBC	F743	FUEL OIL
CONCENTRATION	w/w %	100	10	100	100.00	10.00	100.00	100.00	100.00	100.00	10.00	100.00	100	100	100
S.G		1	1	1.2	1.00	1.00	1.20	0.81	1.01	0.82	1.00	1.20	0.807	1.009	0.82
NOMINAL DOSAGE	g/t	N.N.F	N.N.F	N.N.F	4.17	2.76	2.76	2.22	2.22	5.71	4.14	4.14	N.N.F	N.N.F	N.N.F
DOSAGE FLOW RATE (MIN.)	ml/min	-	-	-	187.50	1241.38	103.45	123.92	99.11	313.59	1862.07	155.17	-	-	-
DESIGN DOSAGE	g/t	-	-	-	8.33	6.90	6.90	5.56	5.56	7.35	10.34	10.34	-	-	-
DOSAGE FLOW RATE (MAX.)	ml/min	-	-	-	375.00	3103.45	258.62	309.79	247.77	403.52	4655.17	387.93	-	-	-

REV.	DATE	DESCRIPTION	PREPARED	CHECKED	APPROVED	AUTHORIZED
04	2025.03.04	ISSUED FOR APPROVAL				
03	2024.12.29	ISSUED FOR APPROVAL				
02	2024.03.04	ISSUED FOR APPROVAL				
01	2024.02.28	ISSUED FOR APPROVAL				
00	2023.11.28	ISSUED FOR REVIEW				

Title:

PFD For Cu Flotation Area-33

Document Number:	CLASS	SIZE	SCALE	SHEET NO.	REV.	
12002-D-PR-PFD-303-FLO-024					CLIENT	VENDOR
Library code: 303-E03-0000-00-PR-PFD-024-4	FA	A3	N.T.S	7 OF 12	04	00

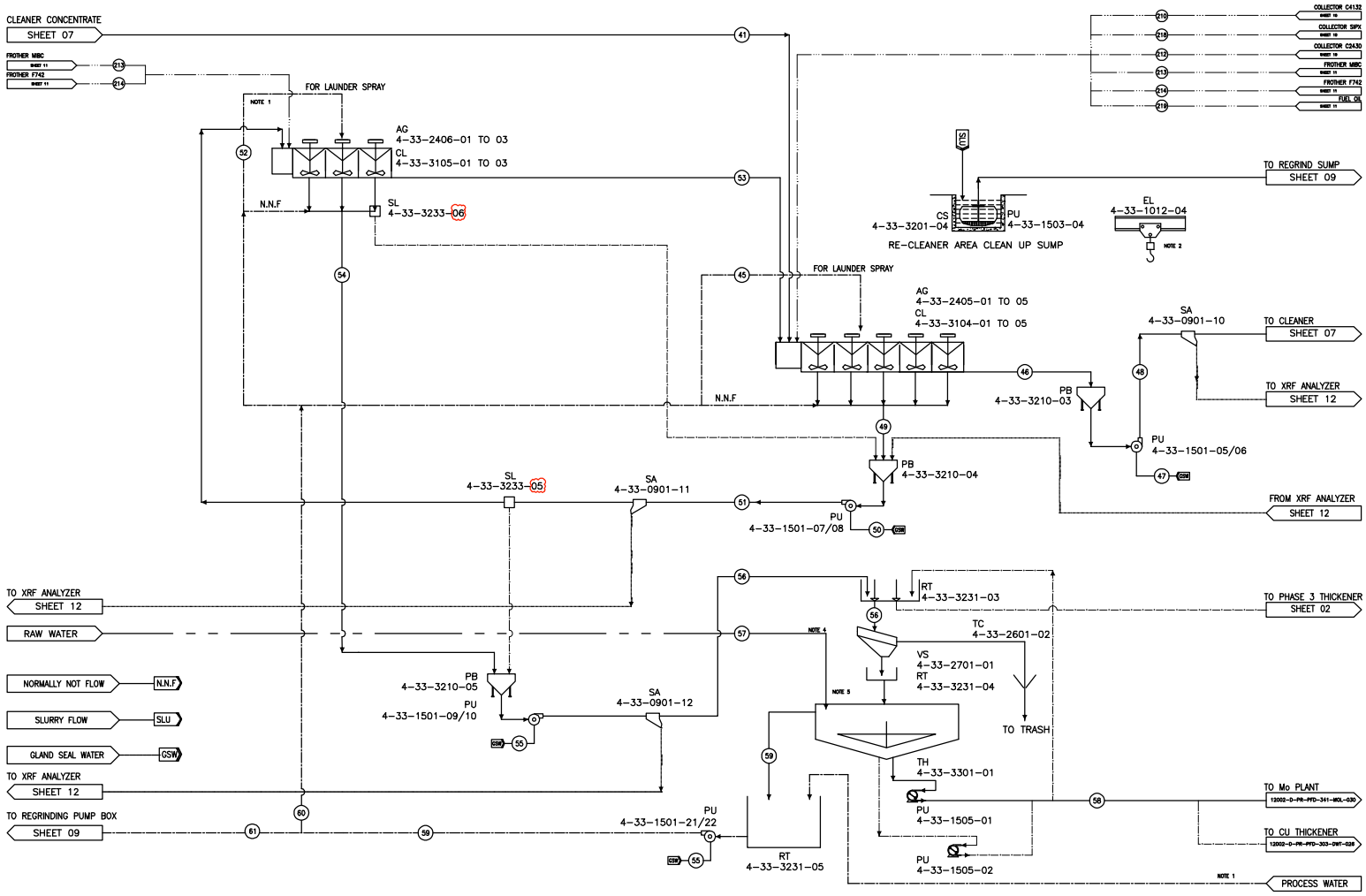

REFERENCE

REFERENCE. TITLE	REFERENCE. No.
PROCESS DESIGN CRITERIA	12002.D.PR.DCA.303.GNL.003
PFD Symbol and Legend	12002.D.PR.PFD.303.GNL.005

NOTES

1. PROCESS FLOW USED WHEN THICKENER OVERFLOW DECREASE.
2. QUANTITY OF ELECTRICAL HOIST IN FLOTATION AREA WILL BE FINALIZED DURING DETAIL DESIGN.
3. GLAND SEAL WATER FLOW RATE WILL BE FINALIZED BY VENDOR.
4. RAW WATER TO BE USED FOR FROTH SUPPRESSION ON Mo-Cu CONCENTRATE THICKENER. FLOW RATE WILL BE FINALIZED BY VENDOR DURING DETAIL DESIGN.
5. FROTH COLLECTING OR FROTH SUPPRESSION EQUIPMENT WILL BE CONSIDERED.

REV.	DATE	DESCRIPTION	PREPARED	CHECKED	APPROVED	AUTHORIZED
04	2025.03.04	ISSUED FOR APPROVAL				
03	2024.12.29	ISSUED FOR APPROVAL				
02	2024.03.04	ISSUED FOR APPROVAL				
01	2024.02.28	ISSUED FOR APPROVAL				
00	2023.11.28	ISSUED FOR REVIEW				

Title:

PFD For Cu Flotation Area-33

Document Number:	CLASS	SIZE	SCALE	SHEET NO.	REV. CLIENT	REV. VENDOR
12002-D-PR-PFD-303-FLO-024	FA	A3	N.T.S	8 OF 12	04	00
Library code: 303-E03-0000-00-PR-PFD-024-4						

NOMINAL FLOW 2340 DTPH 0.44 Cu

Stream.no		41	45	46	47	48	49	50	51	52	53	54	55	56	57	58	59	60	61
Solids	dmt/h	65.45	0.00	24.70	0.00	24.70	54.58	0.00	54.58	0.00	13.83	40.75	0.00	40.75	0.00	40.75	0.00	0.00	0.00
Solid	%	17.00	0.00	9.17	0.00	9.11	18.12	0.00	18.00	0.00	9.78	20.20	0.00	20.00	0.00	50.00	0.00	0.00	0.00
Water flowrate	m^3/h	319.57	44.00	244.57	2.00	246.57	246.61	2.00	248.61	40.00	127.61	161.00	2.00	163.00	70.00	40.75	192.25	84.00	108.25
Slurry flowrate	m^3/h	337.26	44.00	252.54	2.00	254.54	260.78	2.00	262.78	40.00	131.67	171.19	2.00	173.19	70.00	50.94	192.25	84.00	108.25
Slurry/bulk	t/h	385.02	44.00	269.27	2.00	271.27	301.18	2.00	303.18	40.00	141.43	201.75	2.00	203.75	70.00	81.50	192.25	84.00	108.25
Slurry Density	t/m^3	1.14	1.00	1.07	1.00	1.07	1.15	1.00	1.15	1.00	1.07	1.18	1.00	1.18	1.00	1.60	1.00	1.00	1.00
Solid Density	t/m^3	3.70	-	3.10	-	3.10	3.85	-	3.85	-	3.40	4.00	-	4.00	-	4.00	-	-	-
Cu Grade	%	16.50	-	6.60	-	6.60	20.00	-	20.00	-	12.63	22.50	-	22.50	-	22.50	-	-	-
Cu Mass	t/h	10.80	-	1.63	-	1.63	10.92	-	10.92	-	1.75	9.17	-	9.17	-	9.17	-	-	-
Cu Distribution	%	104.58	-	15.79	-	15.79	105.70		105.70	-	16.91	88.79	-	88.79	-	88.79	-	-	-

DESIGN FLOW 2700 DTPH 0.44 Cu

Stream.no		41	45	46	47	48	49	50	51	52	53	54	55	56	57	58	59	60	61
Solids	dmt/h	75.52	0.00	28.50	0.00	28.50	62.97	0.00	62.97	0.00	15.95	47.02	0.00	47.02	0.00	47.02	0.00	0.00	0.00
Solid	%	17.00	0.00	9.59	0.00	9.53	18.10	0.00	18.00	0.00	10.18	20.17	0.00	20.00	0.00	50.00	0.00	0.00	0.00
Water flowrate	m^3/h	368.74	44.00	268.66	2.00	270.66	284.87	2.00	286.87	40.00	140.79	186.08	2.00	188.08	70.00	47.02	211.06	84.00	127.06
Slurry flowrate	m^3/h	389.15	44.00	277.85	2.00	279.85	301.23	2.00	303.23	40.00	145.49	197.83	2.00	199.83	70.00	58.77	211.06	84.00	127.06
Slurry/bulk	t/h	444.26	44.00	297.16	2.00	299.16	347.84	2.00	349.84	40.00	156.75	233.10	2.00	235.10	70.00	94.04	211.06	84.00	127.06
Slurry Density	t/m^3	1.14	1.00	1.07	1.00	1.07	1.15	1.00	1.15	1.00	1.08	1.18	1.00	1.18	1.00	1.60	1.00	1.00	1.00
Solid Density	t/m^3	3.70	-	3.10	-	3.10	3.85	-	3.85		3.40	4.00	-	4.00	-	4.00	-	-	
Cu Grade	%	16.50	-	6.60	-	6.60	20.00	-	20.00		12.63	22.50	-	22.50	-	22.50	-	-	
Cu Mass	t/h	12.46	-	1.88	-	1.88	12.59	-	12.59		2.01	10.58	-	10.58	-	10.58	-	-	
Cu Distribution	%	104.58	-	15.79	-	15.79	105.70	-	105.70		16.91	88.79	-	88.79	-	88.79	-	-	

NOMINAL CAPACITY (2340 DMTPY)

STREAM NO		210	212	213	214	218	219
REAGENT TYPE		C4132	C2430	MIBC	F742	SPIX	FUEL OIL
CONCENTRATION	w/w %	100.00	100.00	100.00	100.00	10.00	100.00
S.G		1.00	1.20	0.81	1.01	1.00	0.82
NOMINAL DOSAGE	g/t	4.17	2.76	2.22	2.22	5.52	4.57
DOSAGE FLOW RATE (MIN.)	ml/min	162.50	89.66	107.39	85.89	2151.72	217.42
DESIGN DOSAGE	g/t	8.33	6.90	5.56	5.56	13.79	5.88
DOSAGE FLOW RATE (MAX.)	ml/min	325.00	224.14	268.48	214.73	5379.31	278.77

DESIGN CAPACITY (2700 DMTPY)

STREAM NO		210	212	213	214	218	219
REAGENT TYPE		C4132	C2430	MIBC	F742	SPIX	FUEL OIL
CONCENTRATION	w/w %	100.00	100.00	100.00	100.00	10.00	100.00
S.G		1.00	1.20	0.81	1.01	1.00	0.82
NOMINAL DOSAGE	g/t	4.17	2.76	2.22	2.22	5.52	4.57
DOSAGE FLOW RATE (MIN.)	ml/min	187.50	103.45	123.92	99.11	2482.76	250.87
DESIGN DOSAGE	g/t	8.33	6.90	5.56	5.56	13.79	5.88
DOSAGE FLOW RATE (MAX.)	ml/min	375.00	258.62	309.79	247.77	6206.90	322.81

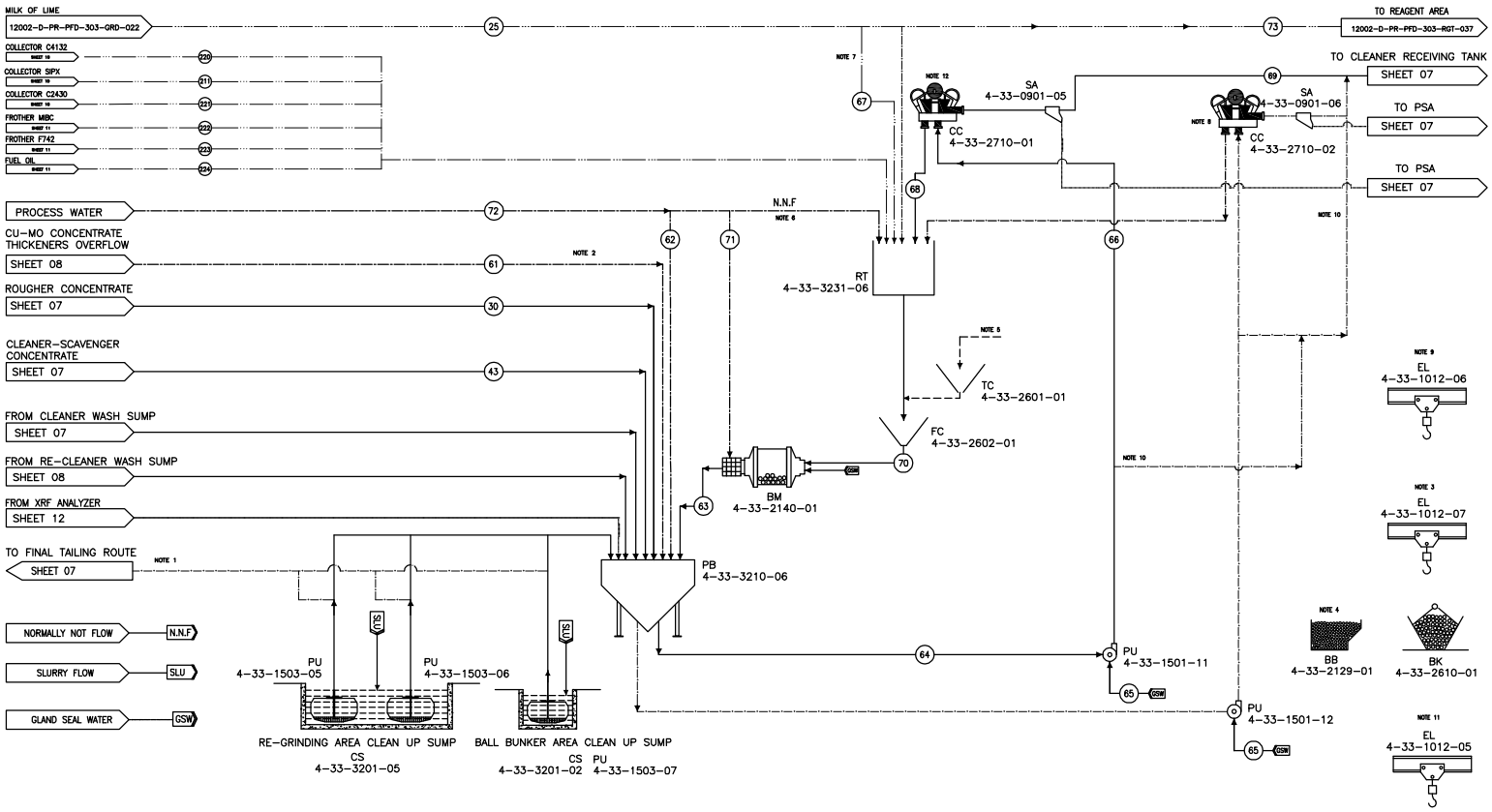

REFERENCE

REFERENCE. TITLE	REFERENCE. No.
PROCESS DESIGN CRITERIA	12002.D.PR.DCA.303.GNL.003
PFD Symbol and Legend	12002.D.PR.PFD.303.GNL.005

NOTES

1. IN EMERGENCY, THE SLURRY LINE WILL BE DIVERTED TO TAILINGS ROUTE.
2. CU-MO CONCENTRATE THICKENER OVERFLOW TO BE USED TO SUPPLEMENT PROCESS WATER TO PUMP BOX, WHEN SUFFICIENT VOLUME IS AVAILABLE.
3. ELECTRIC HOIST TO HAVE MOVABLE BUGGY TO TRANSPORT BALL LOADING SPUTNICK TO REGRIND MILL.
4. BALL BUNKERS TO HAVE 30 DAY CHARGE CAPACITY.
5. BALL IS DIRECTLY FED VIA A DEDICATED NOZZLE.
6. BALL MILL FEED SOLID PERCENT WILL BE FINALIZED BY VENDOR.
7. MILK OF LIME COULD BE ADDED TO UNDERFLOW OF REGRIND CYCLONE FOR pH ADJUSTMENT IN CLEANER STAGES.
8. CYCLONE CLUSTERS WORK AS DUTY AND STAND BY. EACH CLUSTER ARE CONNECTED TO A PUMP.
9.ELECTRIC HOIST TO BE USED TO ACCESS CYCLONE FEED PUMPS FOR MAINTENANCE PURPOSES.
10. IN AN EMERGENCY SITUATION IT WILL BE POSSIBLE TO DIVERT THE SLURRY FROM REGRIND PUMP BOX TO CLEANER STAGE.
11. ELECTRICAL HOIST WILL BE USED FOR MAINTENANCE OF CLEAN UP SUMP PUMP.
12. MILK OF LIME MASS IS NOT CONSIDERED IN HYDRO CYCLONES OVERFLOW.

REV.	DATE	DESCRIPTION	PREPARED	CHECKED	APPROVED	AUTHORIZED
04	2025.03.04	ISSUED FOR APPROVAL				
03	2024.12.29	ISSUED FOR APPROVAL				
02	2024.03.04	ISSUED FOR APPROVAL				
01	2024.02.28	ISSUED FOR APPROVAL				
00	2023.11.28	ISSUED FOR REVIEW				

Title:

PFD For Cu Flotation Area-33

Document Number:	CLASS	SIZE	SCALE	SHEET NO.	REV.	
12002-D-PR-PFD-303-FLO-024					CLIENT	VENDOR
Library code: 303-E03-0000-00-PR-PFD-024-4	FA	A3	N.T.S	9 OF 12	04	00

NOMINAL FLOW 2340 DTPH 0.44 Cu

Stream.no		25	30	43	61	62	63	64	65	66	67	68	69	70	71	72	73
Solids	dmt/h	5.62	328.58	24.00	0.00	0.00	1058.44	1411.02	0.00	1411.02	0.70	1057.74	352.58	1058.44	0.00	0.00	4.91
Solid	%	15.00	25.00	20.00	0.00	0.00	65.08	43.09	0.00	43.00	15.00	66.03	21.00	65.89	0.00	0.00	15.00
Water flowrate	m^3/h	31.82	985.74	96.00	108.25	105.40	568.03	1863.42	7.00	1870.42	3.98	544.05	1326.37	548.03	20.00	125.40	27.85
Slurry flowrate	m^3/h	34.16	1103.09	103.74	108.25	105.40	933.01	2349.98	7.00	2356.98	4.27	908.79	1443.90	913.01	20.00	125.40	29.89
Slurry/bulk	t/h	37.44	1314.32	120.00	108.25	105.40	1626.47	3274.45	7.00	3281.45	4.68	1601.79	1678.95	1606.47	20.00	125.40	32.76
Slurry Density	t/m^3	1.10	1.19	1.16	1.00	1.00	1.74	1.39	1.00	1.39	1.10	1.76	1.16	1.76	1.00	1.00	1.10
Solid Density	t/m^3	2.40	2.80	3.10	-	-	2.90	2.90	-	2.90	2.40	2.90	3.00	2.90	-	-	2.40
Cu Grade	%	-	2.90	3.50	-	-	2.94	2.94	-	2.94	-	2.94	2.94	2.94	-	-	-
Cu Mass	t/h	-	9.53	0.84	-	-	31.11	41.48	-	41.48	-	31.11	10.37	31.11	-	-	-
Cu Distribution	%	-	92.27	8.13	-	-	301.22	401.62		401.62	-	301.22	100.41	301.22	-	-	-

DESIGN FLOW 2700 DTPH 0.44 Cu

Stream.no		25	30	43	61	62	63	64	65	66	67	68	69	70	71	72	73
Solids	dmt/h	6.48	378.13	27.69	0.00	0.00	1221.28	1628.10	0.00	1628.10	0.81	1220.47	406.82	1221.28	0.00	0.00	5.67
Solid	%	15.00	25.00	20.00	0.00	0.00	65.18	43.08	0.00	43.00	15.00	66.03	21.00	65.89	0.00	0.00	15.00
Water flowrate	m^3/h	36.72	1137.39	110.77	127.06	123.62	652.34	2151.18	7.00	2158.18	4.59	627.75	1530.43	632.34	20.00	143.62	32.13
Slurry flowrate	m^3/h	39.42	1272.79	119.70	127.06	123.62	1073.47	2712.58	7.00	2719.58	4.93	1048.60	1666.03	1053.47	20.00	143.62	34.49
Slurry/bulk	t/h	43.20	1516.52	138.46	127.06	123.62	1873.62	3779.28	7.00	3786.28	5.40	1848.22	1937.25	1853.62	20.00	143.62	37.80
Slurry Density	t/m^3	1.10	1.19	1.16	1.00	1.00	1.75	1.39	1.00	1.39	1.10	1.76	1.16	1.76	1.00	1.00	1.10
Solid Density	t/m^3	2.40	2.80	3.10	-	-	2.90	2.90	-	2.90	2.40	2.90	3.00	2.90	-	-	2.40
Cu Grade	%	-	2.90	3.50	-	-	2.94	2.94	-	2.94	-	2.94	2.94	2.94	-	-	-
Cu Mass	t/h	-	10.99	0.97	-	-	35.89	47.85	-	47.85	-	35.89	11.96	35.89	-	-	-
Cu Distribution	%	-	92.27	8.13	-	-	301.22	401.62	-	401.62	-	301.22	100.41	301.22	-	-	-

NOMINAL CAPACITY (2340 DMTPY)

STREAM NO		211	220	221	222	223	224
REAGENT TYPE		SPIX	C4132	C2430	MIBC	F742	FUEL OIL
CONCENTRATION	w/w %	10.00	100.00	100.00	100.00	100.00	100.00
S.G		1.00	1.00	1.20	0.81	1.01	0.82
NOMINAL DOSAGE	g/t	2.76	6.94	5.52	3.33	3.33	6.86
DOSAGE FLOW RATE (MIN.)	ml/min	1075.86	270.83	179.31	161.09	128.84	326.13
DESIGN DOSAGE	g/t	6.90	13.89	13.79	8.33	8.33	8.82
DOSAGE FLOW RATE (MAX.)	ml/min	2689.66	541.67	448.28	402.73	322.10	419.66

DESIGN CAPACITY (2700 DMTPY)

STREAM NO		211	220	221	222	223	224
REAGENT TYPE		SPIX	C4132	C2430	MIBC	F742	FUEL OIL
CONCENTRATION	w/w %	10.00	100.00	100.00	100.00	100.00	100.00
S.G		1.00	1.00	1.20	0.81	1.01	0.82
NOMINAL DOSAGE	g/t	2.76	6.94	5.52	3.33	3.33	6.86
DOSAGE FLOW RATE (MIN.)	ml/min	1241.38	312.50	206.90	185.87	148.66	376.31
DESIGN DOSAGE	g/t	6.90	13.89	13.79	8.33	8.33	8.82
DOSAGE FLOW RATE (MAX.)	ml/min	3103.45	625.00	517.24	464.68	371.66	484.22

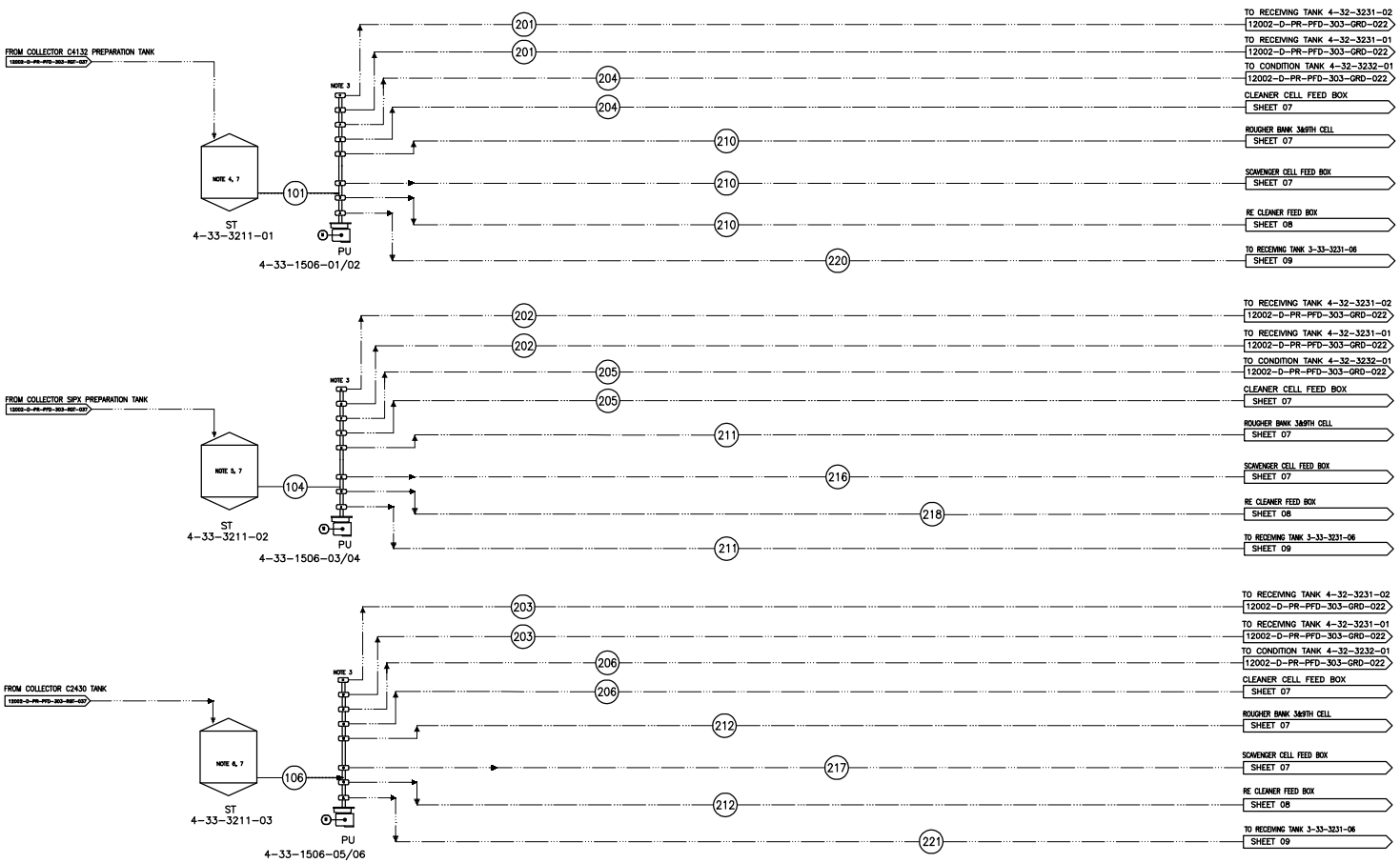

REFERENCE

REFERENCE. TITLE	REFERENCE. No.
PROCESS DESIGN CRITERIA	12002.D.PR.DCA.303.GNL.003
PFD Symbol and Legend	12002.D.PR.PFD.303.GNL.005

NOTES

1. REQUIRED DOSAGES OF COLLECTORS CONSIDERED BASED ON FRESH SOLID FEED TO THE SAG MILL.
2. THE TYPE AND DOSAGE OF REAGENTS WILL BE FINALIZED DURING DETAIL ENGINEERING.
3. MULTI HEAD DOSING PUMPS WORK AS 1 DUTY AND 1 STAND BY.
4. LIVE CAPACITY OF C4132 DAILY TANK IS 3.24 m3.
5. LIVE CAPACITY OF SIPX DAILY TANK IS 32.4 m3.
6. LIVE CAPACITY OF C2430 DAILY TANK IS 2.7 m3.
7. LIVE CAPACITY OF DAILY STORAGE TANKS WILL BE FINALIZED ACCORDING TO G.A DOCUMENTS.

REV.	DATE	DESCRIPTION	PREPARED	CHECKED	APPROVED	AUTHORIZED
04	2025.03.04	ISSUED FOR APPROVAL				
03	2024.12.29	ISSUED FOR APPROVAL				
02	2024.03.04	ISSUED FOR APPROVAL				
01	2024.02.28	ISSUED FOR APPROVAL				
00	2023.11.28	ISSUED FOR REVIEW				

NOMINAL CAPACITY (2340 DMTPY)

STREAM NO		101	104	106	201	202	203	204	205	206	210	211	212	216	217	218	220	221
REAGENT TYPE		C4132	SPIX	C2430	C4132	SPIX	C2430	C4132	SPIX	C2430	C4132	SPIX	C2430	SPIX	C2430	SPIX	C4132	C2430
CONCENTRATION	w/w %	100.00	10.00	100.00	100.00	10.00	100.00	100.00	10.00	100.00	100.00	10.00	100.00	10.00	100.00	10.00	100.00	100.00
S.G		1.00	1.00	1.20	1.00	1.00	1.20	1.00	1.00	1.20	1.00	1.00	1.20	1.00	1.20	1.00	1.00	1.20
NOMINAL DOSAGE	g/t	25.00	20.00	20.00	2.78	2.41	2.41	N.N.F	N.N.F	N.N.F	4.17	2.76	2.76	4.14	4.14	5.52	6.94	5.52
DOSAGE FLOW RATE (MIN.)	ml/min	975.00	7800.00	650.00	108.33	941.38	78.45	-	-	-	162.50	1075.86	89.66	1613.79	134.48	2151.72	270.83	179.31
DESIGN DOSAGE	g/t	50.00	50.00	50.00	5.56	6.03	6.03	-	-	-	8.33	6.90	6.90	10.34	10.34	13.79	13.89	13.79
DOSAGE FLOW RATE (MAX.)	ml/min	1950.00	19500.00	1625.00	216.67	2353.45	196.12	-	-	-	325.00	2689.66	224.14	4034.48	336.21	5379.31	541.67	448.28

DESIGN CAPACITY (2700 DMTPY)

STREAM NO		101	104	106	201	202	203	204	205	206	210	211	212	216	217	218	220	221
REAGENT TYPE		C4132	SPIX	C2430	C4132	SPIX	C2430	C4132	SPIX	C2430	C4132	SPIX	C2430	SPIX	C2430	SPIX	C4132	C2430
CONCENTRATION	w/w %	100.00	10.00	100.00	100.00	10.00	100.00	100.00	10.00	100.00	100.00	10.00	100.00	10.00	100.00	10.00	100.00	100.00
S.G		1.00	1.00	1.20	1.00	1.00	1.20	1.00	1.00	1.20	1.00	1.00	1.20	1.00	1.20	1.00	1.00	1.20
NOMINAL DOSAGE	g/t	25.00	20.00	20.00	2.78	2.41	2.41	N.N.F	N.N.F	N.N.F	4.17	2.76	2.76	4.14	4.14	5.52	6.94	5.52
DOSAGE FLOW RATE (MIN.)	ml/min	1125.00	9000.00	750.00	125.00	1086.21	90.52	-	-	-	187.50	1241.38	103.45	1862.07	155.17	2482.76	312.50	206.90
DESIGN DOSAGE	g/t	50.00	50.00	50.00	5.56	6.03	6.03	-	-	-	8.33	6.90	6.90	10.34	10.34	13.79	13.89	13.79
DOSAGE FLOW RATE (MAX.)	ml/min	2250.00	22500.00	1875.00	250.00	2715.52	226.29	-	-	-	375.00	3103.45	258.62	4655.17	387.93	6206.90	625.00	517.24

Title:

PFD For Cu Flotation Area-33

Document Number:	CLASS	SIZE	SCALE	SHEET NO.	REV.	
12002-D-PR-PFD-303-FLO-024					CLIENT	VENDOR
Library code: 303-E03-0000-00-PR-PFD-024-4	FA	A3	N.T.S	10 OF 12	04	00

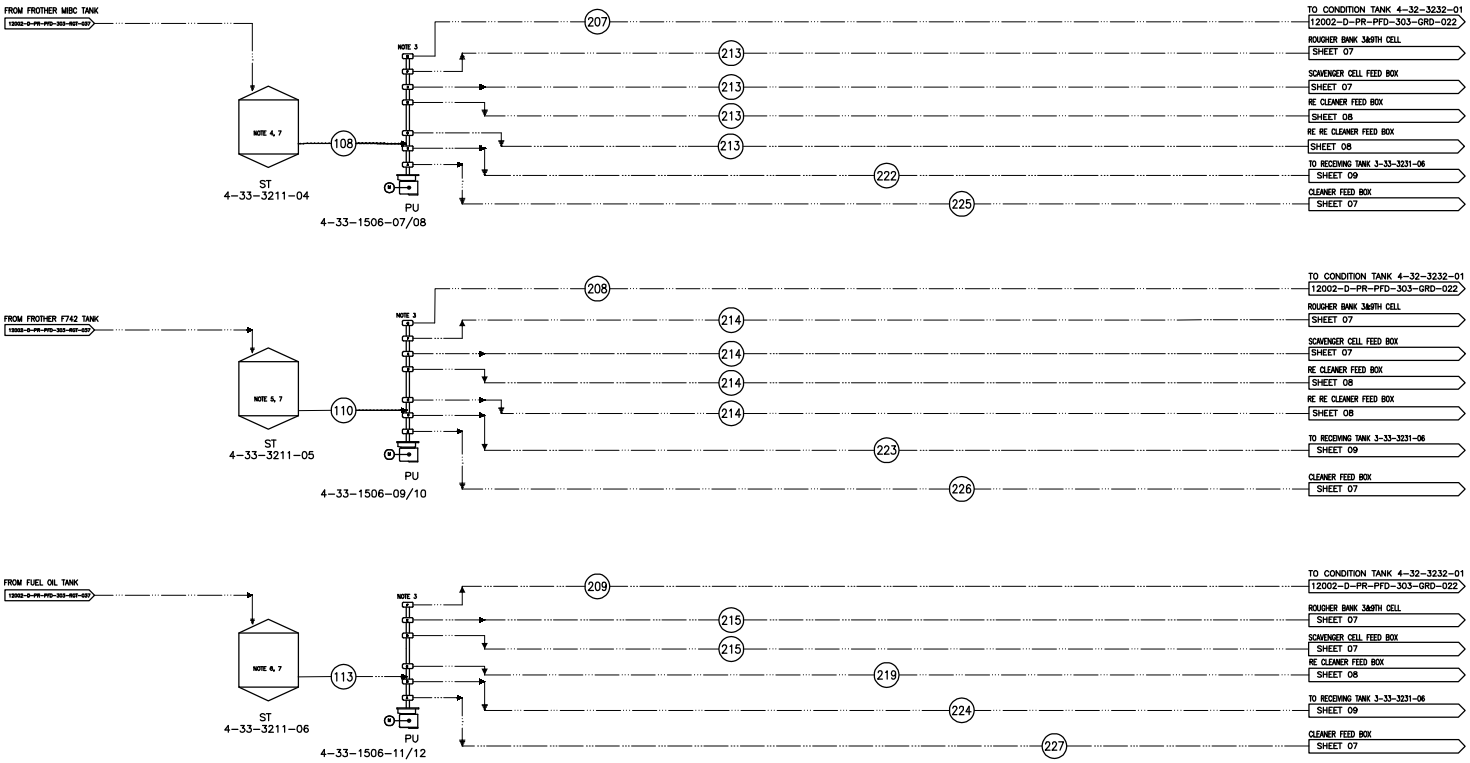

NOMINAL CAPACITY (2340 DMTPY)																		
STREAM NO		108	110	113	207	208	209	213	214	215	219	222	223	224	225	226	227
REAGENT TYPE		MIBC	F742	FUEL OIL	MIBC	F742	FUEL OIL	MIBC	F742	FUEL OIL	FUEL OIL	MIBC	F742	FUEL OIL	MIBC	F743	FUEL OIL
CONCENTRATION	w/w %	100.00	100.00	100.00	100.00	100.00	100.00	100.00	100.00	100.00	100.00	100.00	100.00	100.00	100	100	100
S.G		0.81	1.01	0.82	0.81	1.01	0.82	0.81	1.01	0.82	0.82	0.81	1.01	0.82	0.807	1.009	0.82
NOMINAL DOSAGE	g/t	20.00	20.00	40.00	7.78	7.78	17.14	2.22	2.22	5.71	4.57	3.33	3.33	6.86	N.N.F	N.N.F	N.N.F
DOSAGE FLOW RATE (MIN.)	ml/min	966.54	773.04	1902.44	375.88	300.63	815.33	107.39	85.89	271.78	217.42	161.09	128.84	326.13	-	-	-
DESIGN DOSAGE	g/t	50.00	50.00	50.00	19.44	19.44	20.59	5.56	5.56	7.35	5.88	8.33	8.33	8.82	-	-	-
DOSAGE FLOW RATE (MAX.)	ml/min	2416.36	1932.61	2378.05	939.69	751.57	979.20	268.48	214.73	349.71	279.77	402.73	322.10	419.66	-	-	-

DESIGN CAPACITY (2700 DMTPY)																	
STREAM NO		108	110	113	207	208	209	213	214	215	219	222	223	224	225	226	227
REAGENT TYPE		MIBC	F742	FUEL OIL	MIBC	F742	FUEL OIL	MIBC	F742	FUEL OIL	FUEL OIL	MIBC	F742	FUEL OIL	MIBC	F743	FUEL OIL
CONCENTRATION	w/w %	100.00	100.00	100.00	100.00	100.00	100.00	100.00	100.00	100.00	100.00	100.00	100.00	100.00	100	100	100
S.G		0.81	1.01	0.82	0.81	1.01	0.82	0.81	1.01	0.82	0.82	0.81	1.01	0.82	0.807	1.009	0.82
NOMINAL DOSAGE	g/t	20.00	20.00	40.00	7.78	7.78	17.14	2.22	2.22	5.71	4.57	3.33	3.33	6.86	N.N.F	N.N.F	N.N.F
DOSAGE FLOW RATE (MIN.)	ml/min	1115.24	891.97	2195.12	433.71	346.88	940.77	123.92	99.11	313.59	250.87	185.87	148.66	376.31	-	-	-
DESIGN DOSAGE	g/t	50.00	50.00	50.00	19.44	19.44	20.59	5.56	5.56	7.35	5.88	8.33	8.33	8.82	-	-	-
DOSAGE FLOW RATE (MAX.)	ml/min	2788.10	2229.93	2743.90	1084.26	867.20	1129.84	309.79	247.77	403.52	322.81	464.68	371.66	484.22	-	-	-

REFERENCE

REFERENCE. TITLE	REFERENCE. No.
PROCESS DESIGN CRITERIA	12002.D.PR.DCA.303.GNL.003
PFD Symbol and Legend	12002.D.PR.PFD.303.GNL.005

NOTES

1. REQUIRED DOSAGES OF REAGENTS CONSIDERED BASED ON FRESH SOLID FEED TO THE SAG MILL.
2. THE TYPE AND DOSAGE OF REAGENTS WILL BE FINALIZED DURING DETAIL ENGINEERING.
3. MULTI HEAD DOSING PUMPS WORK AS 1 DUTY AND 1 STAND BY.
4. LIVE CAPACITY OF MIBC DAILY TANK IS 4 m3.
5. LIVE CAPACITY OF F742 DAILY TANK IS 3.2 m3.
6. LIVE CAPACITY OF FUEL OIL DAILY TANK IS 4 m3.
7. LIVE CAPACITY OF DAILY STORAGE TANKS WILL BE FINALIZED ACCORDING TO C.A DOCUMENTS.

REV.	DATE	DESCRIPTION	PREPARED	CHECKED	APPROVED	AUTHORIZED
04	2025.03.04	ISSUED FOR APPROVAL				
03	2024.12.29	ISSUED FOR APPROVAL				
02	2024.03.04	ISSUED FOR APPROVAL				
01	2024.02.28	ISSUED FOR APPROVAL				
00	2023.11.28	ISSUED FOR REVIEW				

Title:

PFD For Cu Flotation Area-33

Document Number:	CLASS	SIZE	SCALE	SHEET NO.	REV.	
12002-D-PR-PFD-303-FLO-024					CLIENT	VENDOR
Library code: 303-E03-0000-00-PR-PFD-024-4	FA	A3	N.T.S	11 OF 12	04	00

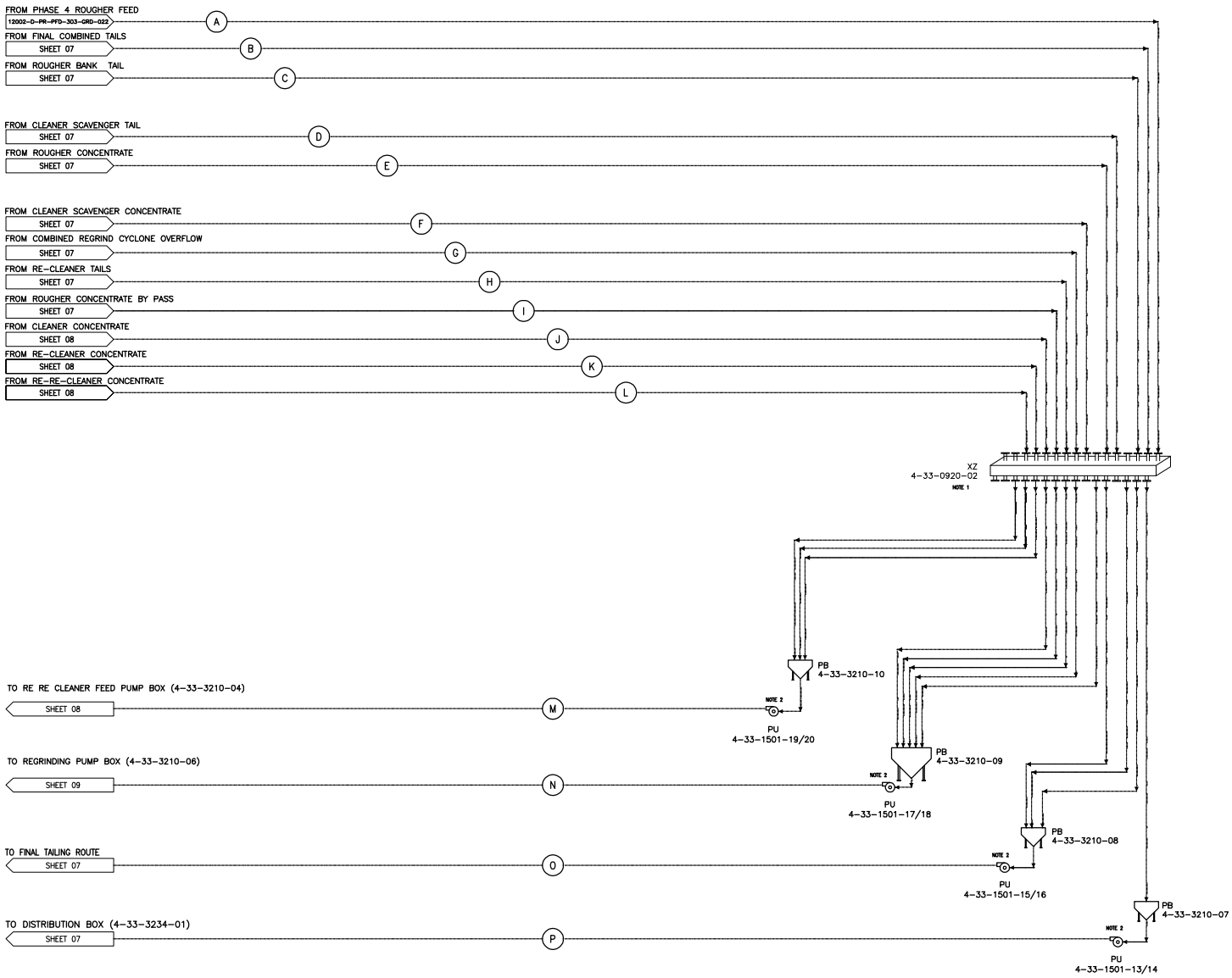

SAMPLES FLOW

Stream.no		A	B	C	D	E	F	G	H	I	J	K	L	M	N	O	P
Solids	dmt/h	5.03	4.47	5.02	1.26	1.79	0.70	1.47	0.29	1.77	0.59	0.62	0.70	1.91	6.01	10.74	5.03
Solid	%	33.00	30.03	32.95	18.51	25.00	20.00	21.00	9.11	24.81	17.13	18.00	20.00	18.39	21.52	29.11	33.00
Water flowrate	m^3/h	10.20	10.41	10.21	5.55	5.36	2.78	5.51	2.90	5.37	2.84	2.83	2.82	8.50	21.93	26.16	10.20
Slurry flowrate	m^3/h	12.00	12.00	12.00	6.00	6.00	3.00	6.00	3.00	6.00	3.00	3.00	3.00	8.99	24.00	29.99	12.00
Slurry/bulk	t/h	15.23	14.87	15.22	6.81	7.15	3.48	6.98	3.19	7.14	3.43	3.46	3.52	10.41	27.94	36.90	15.23
Slurry Density	t/m^3	1.27	1.24	1.27	1.14	1.19	1.16	1.16	1.07	1.19	1.14	1.15	1.18	1.16	1.16	1.23	1.27
Solid Density	t/m^3	2.80	2.80	2.80	2.80	2.80	3.10	3.00	3.10	2.80	3.70	3.85	4.00	3.86	2.90	2.80	2.80
Cu Grade	%	0.44	0.05	0.04	0.13	2.90	3.50	2.94	6.60	7.00	16.50	20.00	22.50	19.85	4.37	0.05	0.44
Cu Mass	t/h	-	-	-	-	-	-	-	-	-	-	-	-	-	-	-	-
Cu Distribution	%	-	-	-	-	-	-	-	-	-	-	-	-	-	-	-	-

REFERENCE

REFERENCE. TITLE	REFERENCE. No.
PROCESS DESIGN CRITERIA	12002.D.PR.DCA.303.GNL.003
PFD Symbol and Legend	12002.D.PR.PFD.303.GNL.005

NOTES

1. POSITION AND METHOD OF SLURRY RETURN TO BE FINALIZED.
2. NECESSITY AND THE TYPE (HORIZONTAL OR VERTICAL) OF TRANSFERRING PUMP WILL BE FINALIZED DURING DETAIL DESIGN ACCORDING TO G.A.

REV.	DATE	DESCRIPTION	PREPARED	CHECKED	APPROVED	AUTHORIZED
04	2025.03.04	ISSUED FOR APPROVAL				
03	2024.12.29	ISSUED FOR APPROVAL				
02	2024.03.04	ISSUED FOR APPROVAL				
01	2024.02.28	ISSUED FOR APPROVAL				
00	2023.11.28	ISSUED FOR REVIEW				

Title:

PFD For Cu Flotation Area-33

Document Number:	CLASS	SIZE	SCALE	SHEET NO.	REV. CLIENT	REV. VENDOR
12002-D-PR-PFD-303-FLO-024						
Library code: 303-E03-0000-00-PR-PFD-024-4	FA	A3	N.T.S	12 OF 12	04	00